

English

Catalog

2026

Second edition

zagroda

zagroda

English

Catalog

zagroda.eu

Subject to technical changes.
The photos are for illustrative purposes only.

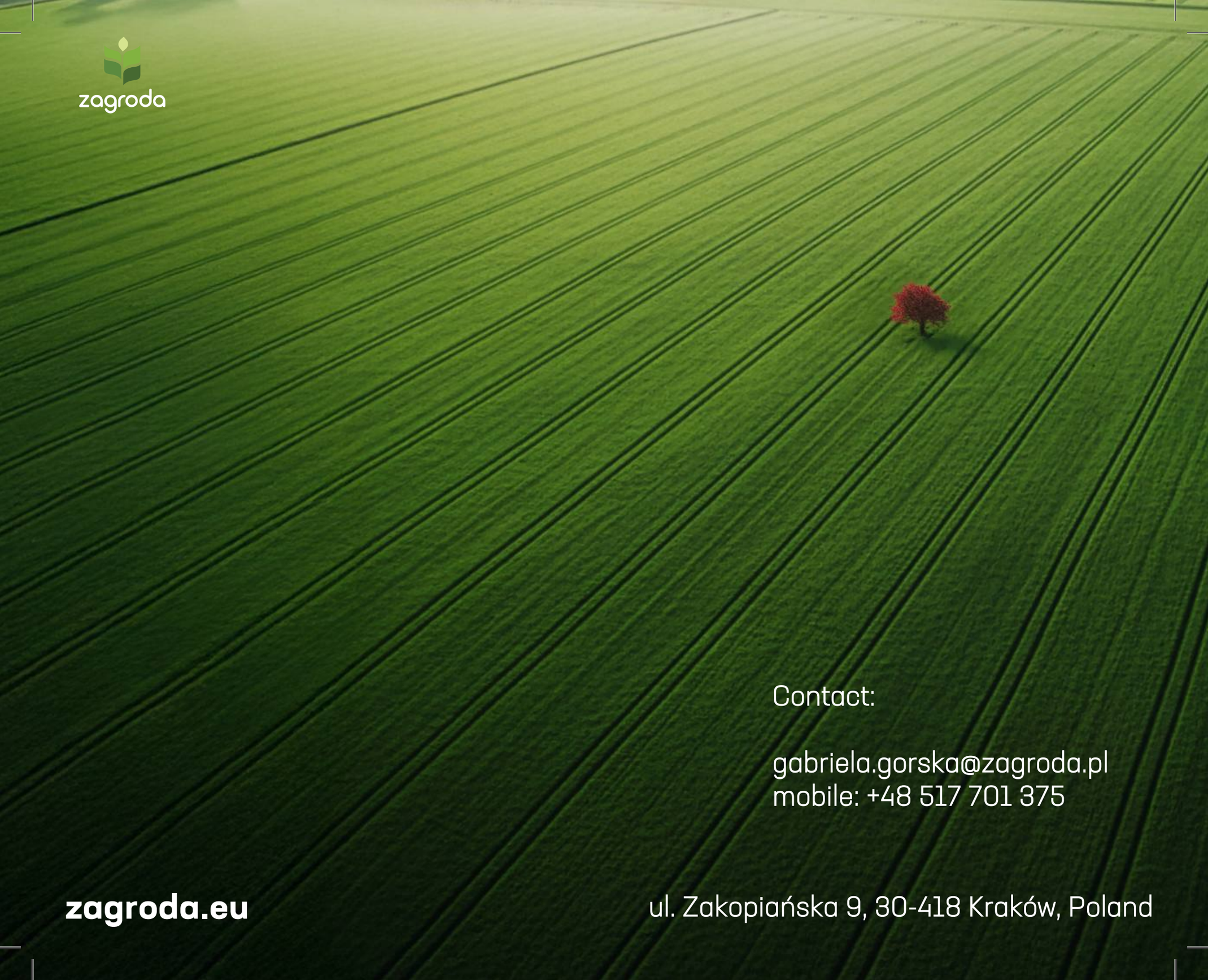

Contact:

gabriela.gorska@zagroda.pl
mobile: +48 517 701 375

zagroda.eu

ul. Zakopiańska 9, 30-418 Kraków, Poland



GRASSLAND

Chain harrow 3
Raking and tedding machines 7
Bale wrapper 10
Land roller 15
Drum mower 16
Weeder 17
Mulching harrow 18
Tooth harrow 19

SOIL CULTIVATION & SPRAYERS

Short disc harrow 20
Short disc harrows X-Cross 30
Tandem knife roller 32
Front wavy disc roller 33
Prism packer roller 35
Stubble cultivator 37
Seedbed combination 45
Subsoiler 49
Chisel plow 53
Campbell & Cambridge rollers 54
Mineral fertilizer spreader 60
Sprayers 63
Front tank 67

POTATO- & VEGETABLE GROWING

Potato planter 72
Ridger 73
Digger 74
Rotovator 76
Potato machines 77

MUNICIPAL MACHINES

Concrete mixer 83
Concrete mixing bucket 84
Sweeping machine 85
Dozer blade 89
Snow plow 91
Snow blower 99
Sand spreader 99

IMPLEMENTS

Bucket 101
Bucket with grapple 112
Grab bucket with a clamp 114
Forks with grapple 116
Manure forks 118
Potato & stone bucket 120
Adaptor 121
Pallet forks 121
Pallet turntable 123
Bale forks 124
BIG BAG carrier 125
Bale carrier 125
Bale unwider 126
Bale unroller 127
Bale cutter 127
Straw gripper 128
Bale gripper 128
Slurry scraper 131
Feeding bucket 132
Silo cutter 140
Silo cutter roller 142
Silage blade 142
Silage roller 143
Silage spreading roller 143

MISCELLANEOUS

Tree transplanter 144
Wood grapple 145
Disc chipper 150
Transport box 151
Screw conveyor 154
Steamer 155
Trolley for hay transporting 156
Earth drill 156
Seeder 157
Grain crusher 157
Riding arena leveller 158

Chain harrow, 1 cylinder, closed frame







Standard equipment:

- 3-point hitch cat. II
- Heavy cast
- For 4,0m and 5,0m chain harrow mechanical or hydraulic unfolding (1 double acting cylinder)
- For 6m and 8m chain harrows hydraulic unfolding (1 double acting cylinder)
- Mechanical transport lock
- Connecting the harrow working field to the main frame by shackles and hooks
- Skids for harrows width 5m to 8m

Chan harrow standard version

Ref. No..	Working width [m]	Folding	Weight[kg]	Price €
1100	3,0	Mechanical	260	1 311
1106	4,0	Mechanical	320	1 583
1108	4,0	Hydraulic	360	2 004
1116	5,0	Mechanical	440	2 152
1118	5,0	Hydraulic	470	2 597
1124	6,0	Hydraulic	540	2 918
1134	8,0	Hydraulic	780	4 105

Chain harrow RX

Ref. No..	Working width [m]	Folding	Weight[kg]	Price €
1100RX	3,0	Mechanical	230	1 173
1106RX	4,0	Mechanical	290	1 417
1108RX	4,0	Hydraulic	320	1 793
1116RX	5,0	Mechanical	400	1 925
1118RX	5,0	Hydraulic	420	2 324
1124RX	6,0	Hydraulic	490	2 611
1134RX	8,0	Hydraulic	700	3 673

Optional equipment	3,0 [m]	Price€	4,0 [m]	Price€	5,0 [m]	Price €	6,0 [m]	Price €	8,0 [m]	Price€
3-point linkage cat. II	x				1100+3pbox	29			x	
Skids	1100+Skid	29	1100+Skid	29	Standard		Standard		Standard	
Galvanized frame	1100+G	248	1106+G	275	1116+G	412	1124+G	514	1134+G	819
Spring tine harrow (weeder)	x		1106+CH	1 163	1116+CH	1 262	1124+CH	1 385	x	
Galvanized weeder	x		1106+CHG	99	1116+CHG	125	1124+CHG	162	x	
Complete APV pneumatic seed drill (with platform)					1116+APV	9 913				
Complete electric seed drill (with platform)					1116+ES	1 549				

Chain harrow, 2 cylinders, closed frame

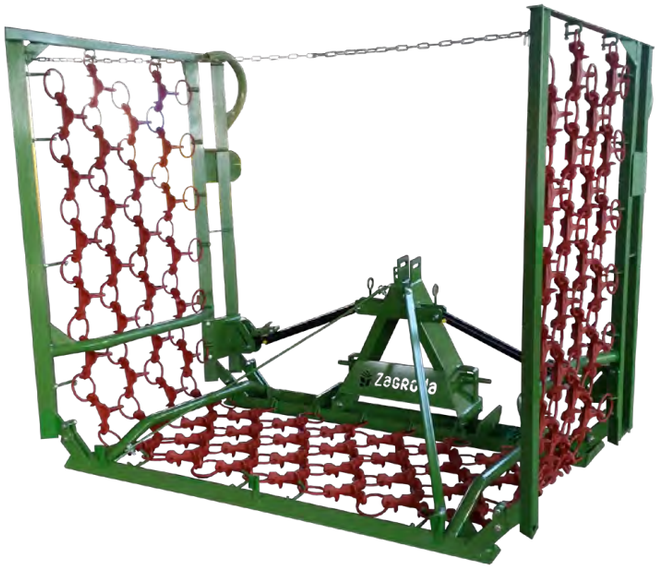

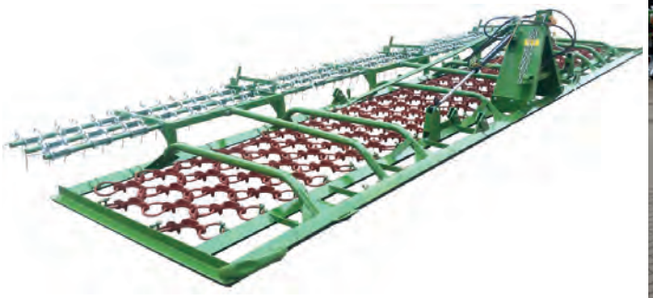



Standard equipment:

- 3-point linkage cat. II, box type
- Mechanical transport safety lock
- 4 rows of heavy cast or RX cast
- Mechanically or hydraulically foldable with 2 double acting cylinders for 4.0 m meadow harrow
- Hydraulic unfolding for (2 double acting cylinders) for 5.0 m and 6.0 m meadow harrows
- Connecting the harrow working field to the main frame by shackles and hooks
- Skids for harrows 5.0m - 8.0m

Chain harrow standard version

Ref. No.	Working width [m]	Folding	Weight [kg]	Price €
1138	4,0	Hydraulic, 3-part	400	2 325
1139	5,0	Hydraulic, 3-part	500	2 869
1140	6,0	Hydraulic, 3-part	580	3 190
1141	8,0	Hydraulic, 5-part	840	4 551
1142	8,0	Hydraulic, 3-part	860	4 823

Chain harrow RX

Ref. No.	Working width [m]	Folding	Weight [kg]	Price €
1138RX	4,0	3-part	360	2 080
1139RX	5,0	3-part	450	2 567
1140RX	6,0	3-part	520	2 855
1141RX	8,0	5-part	760	4 072
1142RX	8,0	3-part	770	4 315

Optional equipment	4,0 [m]	Price €	5,0 [m]	Price €	6,0 [m]	Price €	8,0 [m]	Price €
Skids	1100+Skid	29	Standard		Standard		Standard	
Galvanized frame	1106+G	275	1116+G	412	1124+G	514	1134+G	819
Spring tine harrow (weeder)	1106+CH	1 163	1116+CH	1 262	1124+CH	1 385	1142+CH	1 583
Galvanized weeder	1106+CHG	99	1116+CHG	125	1124+CHG	162	x	
Complete APV pneumatic seed drill (with platform)			1116+APV	9 913				
Complete electric seed drill (with platform)			1116+ES	1 549				

*No weeder available for 8m 5-part harrow
x - Not possible in a given configuration

Chain harrow, 2 cylinders, open frame







Heavy cast

Standard equipment:

- 3- point linkage cat. II, box type
- 4 rows of heavy cast or RX cast
- Mechanical transport safety lock
- Connecting the harrow working field to the main frame by shackles and hooks
- For 4,0m harrow mechanical or hydraulic unfolding (2 double acting cylinders)
- For 5,0m and 6,0m harrow hydraulic unfolding (2 double acting cylinders)
- Skids for harrows width 5,0 to 8,0m

Chain harrows - standard

Ref. No.	[Working width [m]	Folding	Weight [kg]	Price €
1146	4,0	Mechanical	380	1 756
1148	4,0	Hydraulic	410	2 374
1156	5,0	Hydraulic	525	2 943
1160	6,0	Hydraulic	625	3 265

RX chain harrows

Ref. No.	Working width[m]	Folding	Weight [kg]	Price €
1146RX	4,0	Mehanical	340	1 571
1148RX	4,0	Hydraulic	370	2 125
1156RX	5,0	Hydraulic	470	2 633
1160RX	6,0	Hydraulic	560	2 921

Optional equipment	4,0 [m]	Price €	5,0 [m]	Price €	6,0 [m]	Price€
Skids	1100+Skid	29	Standard		Standard	
Galvanized frame	1106+G	275	1116+G	412	1124+G	514

MINI chain harrow width 1,5 m to 2,6 m



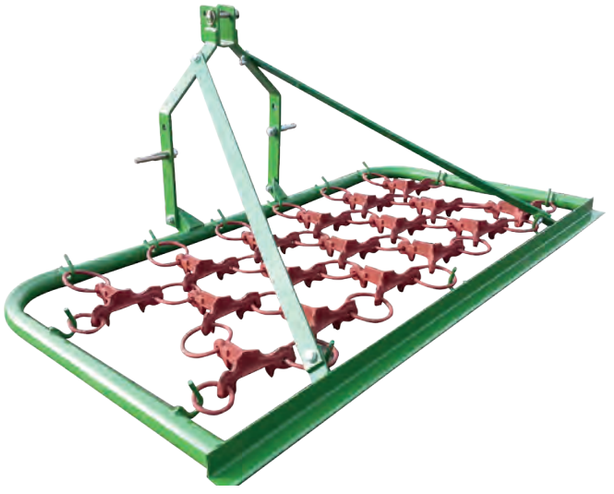

Standard equipment:

- 3-point linkage cat. I or I N
- 3 rows of heavy casts
- Closed frame
- Connecting the harrow working field to the main frame by hooks

Ref. No.	Working width [m]	Weight [kg]	Price €
1053	1,5	80	406
1054	1,8	90	456
1055	2,0	100	510
1056	2,4	110	569
1057	2,6	120	629

Optional equipment	1,5 [m]	Price €	1,8 [m]	Price €	2,0 [m]	Price €	2,4 [m]	Price €	2,6 [m]	Price €
Galvanized frame	1053+G	On request	1054+G	On request	1055+G	On request	1056+G	On request	1057+G	On request

Wheel raking and tedding machine, mounted

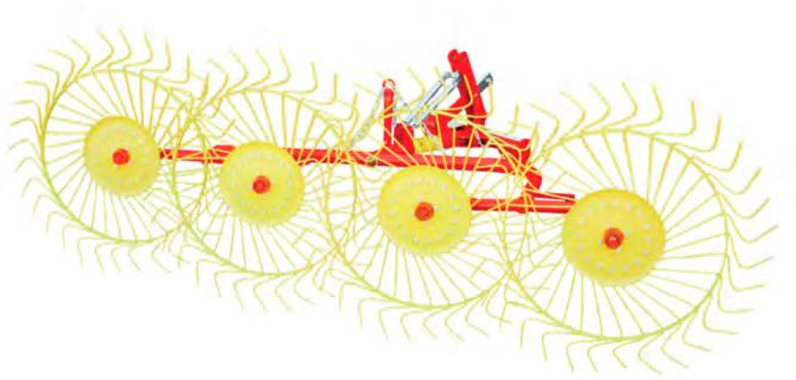

Standard equipment:

- 3-point linkage cat. I and II
- Rake wheel diameter 1,2m
- Tine diameter6 mm
- Working speed for tedding 12km/h
- Working speed for raking 8.5 km/h
- Transport clerance min. 350mm
- Transport width less than 3.0 m

Ref. No.	Width [m]	Length [m]	Tedding working width [m]	Raking working width [m]	Number of working wheels [pcs.]	Tedding efficiency [ha/h]	Raking efficiency [ha/h]	Weight [kg]	Price €
1354	2,4	2,65	2,3	1,5	4	~ 2.0	~ 1.0	122	On request
1355	2,9	3,7	3,7	2,9	5	~ 2,5	~ 1,3	140	On request

Wheel raking and tedding machine, trailed



Standard equipment:

- Drawbar attached to the tractor's lower transport hitch (max. 45cm)
- Rake wheel diameter 1,2m
- Tine thickness 6mm
- Working speed for tedding 10km/h
- Working speed for raking 8,5km/h
- Transport clerance min. 350mm
- Wheels 4.00-10

Ref. No.	Width [m]	Lenght [m]	Tedding working width [m]	Raking working width [m]	Number of working wheels [pcs.]	Tedding efficiency [ha/h]	Raking efficiency [ha/h]	Weight [kg]	Price €
1356	2,2	4,72	3,0	1,7	5	~ 2,6	~ 1,5	330	On request
1357	2,2	5,42	3,8	2,8	6	~ 3,0	~ 1,8	380	On request
1358	2,2	5,9	4,0	3,0	7	~ 3,6	~ 2,1	430	On request
1359	2,2	7,3	5,3	4,0	9	~ 7,3	~ 2,4	480	On request

Rotary tedder with belt transmission



Standard equipment:

- 3-point linkage cat. I and II
- 2 metal supporting wheels
- Supporting leg
- Safety cover

Ref. No.	Length/width/height [m]	Working width [m]	Power demand [HP]	Efficiency [ha/h]	Weight [kg]	Price €
1350	1,46/2,61/1,2	2,7	20	2,4	120	841

Optional equipment	Ref. No.	Price €
PTO shaft 210Nm/510 mm	WOM210/510	68

Raking and tedding machine with PTO shaft





Standard equipment:

- 3-point linkage cat. I and II
- Tedding shaft powered by chain transmission
- Mechanically adjustable swath width
- Swivel wheels 16x6.5-8 with height adjustment
- PTO shaft

Ref. No.	Working width [m]	Fingers [pcs.]	Efficiency [ha/h]	Power demand [HP]	Weight [kg]	Price €
1371	2,25	72	~ 2,25	20	580	10 730
1372	2,75	86	~ 2,75	75	765	13 822

Belt driven raking and tedding machine



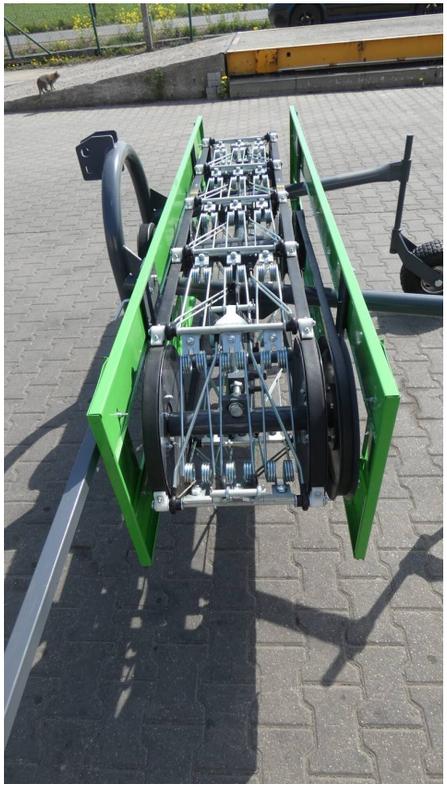

Standard equipment:

- 3-point linkage cat. I and II, floating
- Metal screen for swath forming
- Support wheels, 400x8 tyres

Ref. No.	Working width	Transport width [m]	Power demand [HP]	Weight [kg]	Price €
1351A	1,8/1,5	2,0	10	175	**1 453**
1351	2,8/2,1	2,7	10	220	**1 765**

Optional equipment	Ref. No.	Price €
PTO shaft 270Nm/710 mm	WOM270/710	133

Bale wrapper with 3-point hitch, external loading

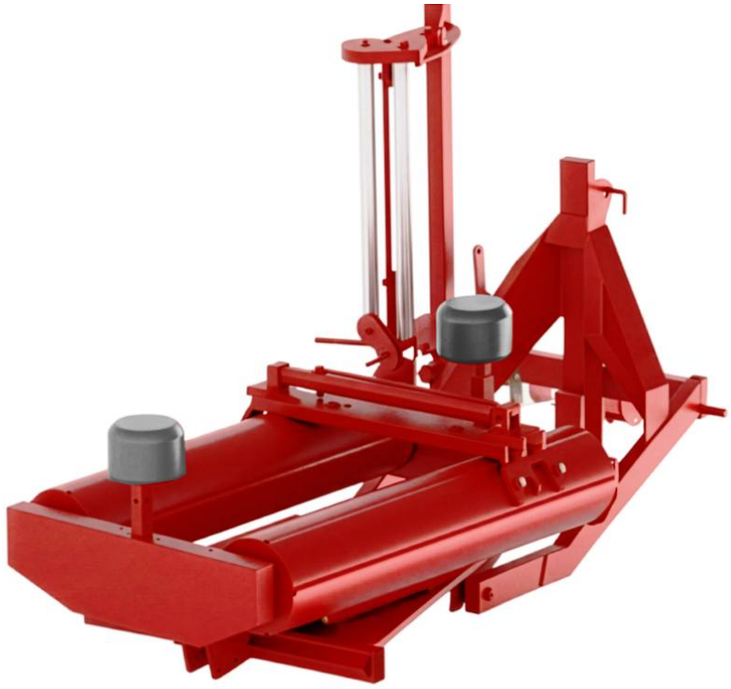





Standard equipment:

- 3-point linkage, cat. II
- Film dispenser 500/750 mm with automatic film cutter
- 2 stabilizing side rollers
- Electronic bale counter and wrap counter
- Hydraulic drive from tractor pump
- Time to wrap a bale with 2 layers of film - approx. 120 sec
- Control using the tractor control lever

Ref. No.	Bale diam. [m]	Bale max. width [m]	Film width [mm]	Power demnd [HP]	Weight [kg]	Price €
1503A	1,3	1,25	500 / 750	38	450	3654

Optional equipment	Ref. No.	Price€
Mechanical damper to set bales in vertical position	1503A+MD	632

Bale wrapper RX with 3-point hitch, external loading





Standard equipment:

- 3-point linkage, cat. II
- Film dispenser 500/750 mm with automatic film cutter
- 2 stabilizing side rollers
- Electronic bale counter and wrap counter
- Hydraulic drive from tractor pump
- Time to wrap a bale with 2 layers of film – approx. 120 sec

Ref. No.	Bale diam. [m]	Bale max. width [m]	Film width [mm]	Power demnd [HP]	Weight [kg]	Price €
1503RX	1,3	1,25	500 / 750	25-44	480	2 849

Optional equipment	Ref. no.	Price €
Mechanical damper to se bales in vertical position	1503RX+MD	391

Self loading bale wrapper with rear loading



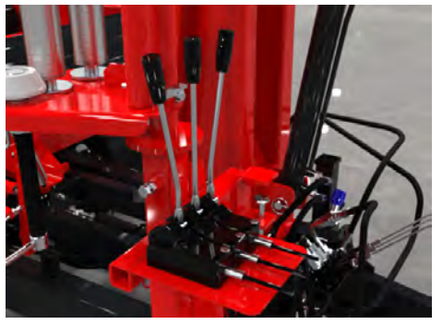







Standard equipment:

- Drawbar for the lower and upper hitch of the tractor
- Hydraulic arm for rear loading and unloading
- 4 rotating rollers with embossing preventing the bale from slipping
- 2 protective side cones
- Foil dispenser for film width 500/750 mm with a cutting mechanism
- Supporting leg
- Automatic activation of wrapping process (except the first bale)
- Automatic table blockade during loading and unloading and putting the table in central position during unloading
- Hydraulic table raising
- Hydraulic drive from tractor pump
- Electronic counter of: number of bale wraps, working time, number of bales, average number of bales per hour
- Bowden cable control
- Tires 23x8.5-12 10 PR
- Wrapping time (2 layers of 500mm foil 2 minutes or 750mm 1.3 minutes)
- System for rotating wheel axles

Ref. No.	Bale diameter [m]	Bale max. width [m]	Power demand [HP]	Length/width/height [m]	Weight [kg]	Price €
1502	1,2	1,2	40	3,2/ 1,7/ 2,58	850	11 495

Optional equipment	Ref. No.	Price €
Mechanical damper to set bales in vertical position	1502+3P	2 458

Self loading round bale wrapper with side loading







Standard equipment:

- Drawbar for upper or lower hitch
- Hydraulic side loading arm with spacing adjustment
- 4 rotating rollers with embossing preventing the bale from slipping
- Protective side cones
- Universal foil dispenser for foil width 500/750mm with automatic film cutting device
- Automatic activation of wrapping process (except the first bale)
- Automatic table blockade during loading and unloading and putting it in central position during unloading
- Hydraulic table raising
- Electronic counter of: number of bale wraps, working time, number of bales, average number
- Hydraulic drive from the tractor pump
- Bowden cable control
- Tires 10.0/80-12.10 PR
- Possibility of changing wheels spacing for work and transport position
- Front platform
- Supporting foot
- Wrapping time (2 layers of 500mm foil 2 minutes or 750mm 1,3 minutes)

Ref. No.	Bale diameter [m]	Bale max. width [m]	Powerdemand [HP]	Length/width/height [m]	Weight [kg]	Price €
1504	1,0-1,2	1,2	40	4,35/2,45 /2,38	950	13 953
1504H	1,0-1,2	1,2	40	4,35/2,45 /2,38	950	15 410

Optional equipment	Ref. No.	Price €
Mechanical damper to set bales in vertical position	1504+MD	917

Self loading bale wrapper with side loading











Standard equipment:

- Drawbar for lower hitch in the work - transport position
- Hydraulic front loading arm
- 4 rotating rollers with embossing preventing the bale from slipping
- 2 side wheels
- Universal foil dispenser for the foil width 500/750mm with automatic film cutter
- Automatic activation of wrapping process (except the first bale)
- Automatic table blockade during loading and unloading and putting it in central position during unloading
-
- Hydraulic raising of the table
- Hydraulic damper for setting bales in vertical position with adjustable support leg
- Electronic counter of: number of bale wraps, working time, number of bales, average number of bales per hour
- Hydraulic drive from tractor pump
- Bowden cable control
- Tires 26.5/14.00-12 10 PR
- Front platform
- Wrapping time (2 layers of 500mm foil 2 minutes or 750mm 1,3 minutes)

Ref. No.	Bale diameter [m]	Bale max. width [m]	Power demand[HP]	Length/width/height [m]	Weight[kg]	Price €
1506	1,2	1,2	40	5,22/ 2,2/ 2,5	1250	**19 159**

Optional equipment	Ref. No.	Price €
Drawbar for upper hitch	1506+UDB	On request

Land roller, trailed



Ø 1220mm - rounded edges



Ø 810mm - sharp edges

Standard equipment:

- One-piece roller
- Ceaning scraper
- Drawbar with supporting foot
- Frame suitable for mounting the
- Weight adjustable by filling roller with water

Ref. No.	Working width [m]	Transport width [m]	Diametre [mm]	Weight kg]	Volume [L]	Price €
1021AJ	1,80	2,05	810	1470	900	2 208
1022AJ	2,00	2,25	810	1540	1000	2 624
1023AJ	2,40	2,65	810	1530	1200	2 958
1024AJ	2,75	2,98	810	1615	1400	3 374
1025AJ	2,50	2,87	1220	1530	2700	7 206
1026AJ	2,75	2,97	1220	1615	3000	7 497

Optional equipment	Ref. No.	Price €
Chassis without brakes (400/60-15.5) for reference numbers 1025AJ-1026AJ	1024AJ+TV	3 082
LED lights	8000+LED5	222

2 drum rear mower









Standard equipment:

- 3-point linkage cat. I (1 m) and cat. II (from 1.35 m)
- Mechanical folding to transport position
- Drive shaft 540 rpm
- Metal cover and tarpaulin

Ref. No.	Working width [m]	Folding	Powerdemand [HP]	Number of knives[pcs.]	Weight[kg]	Price €
1200IL	1.00	Mehanical	20	6	100	1 224
1201MIL	1,35	Mehanical	20	4	270	2 317
1201IL	1,35	Mehanical	20	4	280	2 317
1203IL	1,65	Mehanical	40	6	350	2 317
1203HIL	1,65	Hydraulic	40	6	360	2 682
1204IL	1,85	Mehanical	50	6	420	2 682
1204HIL	1,85	Hydraulic	50	6	430	3 046
1205IL	2,10	Hydraulic	65	6	460	4 530

Optional equipment	Ref. No.	Price €
PTO shaft 270Nm, 510mm (pour 1,00m-1,35m	WOM270/510	76
PTO shaft270Nm, 710 mm (pour 1,00m-1,35m)	WOM270/710	133
PTO shaft 460Nm, L 800 (à partir de 1,65m)	WOM460/800	157

Weeder

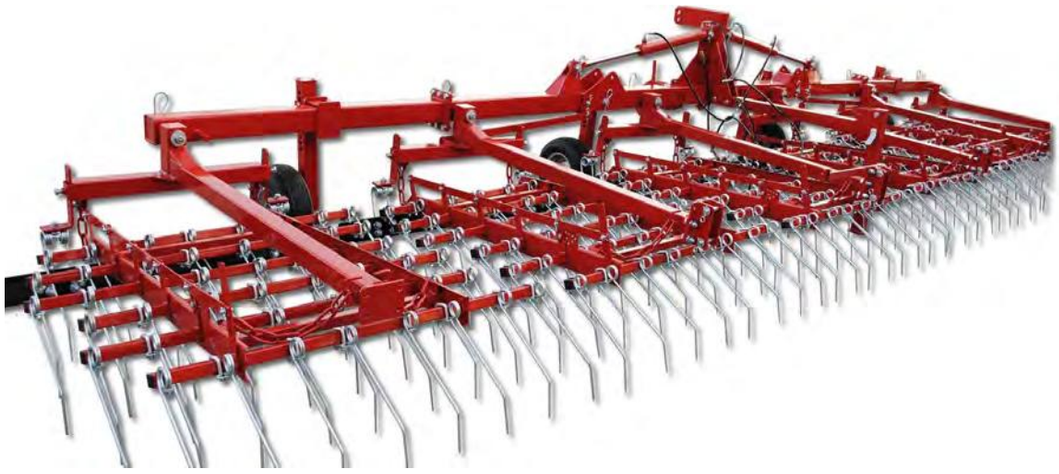



Standard equipment:

- 3-point linkage cat. I (3.0m) and cat. II (from 4.5m)
- Spring tine 7mm with height adjustment
- Transport width up to 3,0m
- Support wheels (2 pcs. for 3m, 4.5m, 6m and 4 pcs. for 7.5m, 9m)
- Working depth up to 8cm
- Number of tines 48 pcs (in the working field)

Ref. No.	Working width [m]	Powerdemand [HP]	Number of tines [pcs.]	Weight[kg]	Transport width [m]	Price€
8710	3.0	35	96	200	3,0	2 679
8711	4.5	40	144	500	3,0	5 543
8712	6.0	50	192	620	3,0	6 725
8713	7.5	65	240	760	3,0	8 071
8714	9.0	90	288	870	3,0	9 291

Optional equipment	3,0 m	Price €	4,5 m	Price €	6,0 m	Price €	7,5m	Price€	9,0m	Price €
Front spring levelling board	8710+FSB	244	8711+FSB	366	8712+FSB	488	8713+FSB	610	8714+FSB	732
Spring tine Ø 8mm	8710+SF	305	8711+SF	458	8712+SF	610	871213+SF	763	8714+SF	915
Spring tine Ø 9mm	8710+SF9	400	8711+SF9	600	8712+SF9	800	8713+SF9	1 000	8714+SF9	1 200
Spring tine Ø 10mm	8710+SF10	440	8711+SF10	660	8712+SF10	880	8713+SF10	1 100	8714+SF10	1 320

Mulching harrow





Standard equipment:

- 3-point linkage cat. II and III
- 5 rows of spring tines Ø 16mm/ length 750 mm
- Hydraulically adjustable depth of harrow tines and discs pressure
- Supporting legs
- Hydraulic folding for transport
- Working speed 10-25km/h
- Tines:
  6.0m - 50 pcs
  7.5m - 60 pcs
  9.0m - 75 pcs

Ref. No.	Working width [m]	Powerdemand [HP]	Weight [kg]	Price€
7500	6,0	90	1600	20 937
7503	7,5	120	1850	22 565
7506	9,0	180	2300	27 551

Optional equipment	6,0m	Price €	7,5m	Price €	9,0m	Price €
Knife roller ProCut Ø375 mm; double	7500+KR375	9 180	7503+KR375	11 470	7506+KR375	14 877
Cutting discs	7500+D460	6 244	7503+D460	6 981	7506+D460	8 280
APV seeder with hydraulic blower			7500+APV	On request		
Rear boom with LED lights			8000+LED11	771		

Tooth harrow







Ref. No.	Working width [m]	Transport width [m]	Power demand [HP]	Weight [kg]	Price €
8801	5,0	3,0	80	460	**3 496**
8802	6,0	3,0	90	576	**4 293**
8803	7,0	3,0	100	642	**4 824**
8804	9,0	3,0	110	1260	**8 585**

Standard equipment:

- 3-point linkage cat. II
- Hydraulic folding with one cylinder
- Mechanical transport safety lock
- Tine 20mm
- Supporting leg
- 5 rows of tines
- Number of tines in the field 20 pieces
- 1 field corresponds to 1 working meter
- Fields mounted on chains

Optional equipment	Ref. No.	Price€
Extra charge for two cylinders for arms folding	8801+C	**443**

Mounted disc harrow with rubber disc protection







Standard equipment:

- 3-point linkage cat. II and III
- Mechanical adjustment of working depth on the roller
- Side screens with height adjustment
- Working depth of the discs Ø 560 mm up to 15cm, Ø 610 mm up to 20 cm
- Transport width less than 3,0m (for version 3.5 transport width max. 3.5 m)
- Adjustment of the working depth of the edge disc

Version N

2 rows of discs Ø 560mm, row spacing 85cm, 2 edge discs Ø 510mm, disc rubber protection Ø 40mm, tubular roller Ø 500mm

Version Na

2 rows of discs Ø 610mm, row spacing 95cm, 2 edge discs Ø 560mm, disc rubber protection Ø 50mm, tubular roller Ø 600mm

Ref. No.	Working width[m]	Disc diameter [mm]	Space between the rows [mm]	Number of discs [pcs.]	Powerdemand[HP]	Weight[kg]	Price€
8521N	3,0	560	850	24	80-100	1328	**12 527**
8521Na	3,0	610	950	24	80-100	1558	**15 979**
8522N	3,5	560	850	28	90-120	1786	**14 894**
8522Na	3,5	610	950	28	90-120	2016	**18 887**

Optional equipment	3,0 m	Price €	3,5 m	Price €
Row of harrow springs mounted behind the roller	8521+BSF	1 386	8522+BSF	2 277
Row of harrow springs mounted in front of the roller	8521+SF	1 386	8522+SF	2 277
Tubular roller Ø 600 mm (for version with discs 560 mm)	8521+TR600	632	8522+TR600	695
For tubular roller Ø 500 mm thick wall tubes Ø 48,3x6,3 (8521N)	8521+TR500/6,3	367	8522+TR500/6,3	472
For tubular roller Ø 600 mm thick wall tubes Ø 48,3x6,3 (8521Na)	8521+TR600/6.3	1 105	8522+TR600/6.3	1 241
Packer roller Ø 500mm	8521+PR500	1 107	8522+PR500	1 345
Packer roller Ø 600mm	8521+PR600	1 793	8522+PR600	2 769
V ring roller Ø 500mm with scrapers	8521+VR500	2 288	8522+VR500	2 766
V ring roller Ø 600mm with scrapers	8521+VR600	3 119	8522+VR600	3 764
FLEX roller Ø 500mm	8521+SR500	2 258	8522+SR500	3 603
FLEX roller Ø 550mm	8521+SR550	3 012	8522+SR550	3 581
Rubber roller Ø 500mm	8521+RR500	3 657	8522+RR500	5 019
T ring roller Ø 500mm	8521+TRR500	2 288	8522+TRR500	2 766
T ring roller Ø 600mm	8521+TRR600	3 119	8522+TRR600	3 764
Flat bar roller Ø 500mm	8521+FBR500	471	8522+FBR500	610
Flat bar roller Ø 600mm	8521+FBR600	1 058	8522+FBR600	1 304
Flat bar roller Ø 500mm	8521+FBRT500	935	8522+FBRT500	1 241
Flat bar roller Ø 600mm	8521+FBRT600	1 567	8522+FBRT600	1 670
Toothed pack ring roller Ø 600mm	8521+FUST600	4 554	8522+FUST600	6 279
Tandem roller (tubular Ø 500mm, flat bar Ø 300mm)	8521+TAR5/3	1 780	8522+TAR5/3	2 321
Tandem roller (tubular Ø 500mm, tubular Ø 400mm)	8521+TAR5/4	2 050	8522+TAR5/4	2 870
Tandem roller U ring Ø500mm	8521+TANC500	4 847	8522+TANC500	5 576
Tandem roller U ring Ø600mm	8521+TANC600	6 606	8522+TANC600	7 653
Maintenance free hubs SKF	8521+MFHSKF	1 178	8522+MFHSKF	1 304
Hydraulic adjustment of working depth (on the roller)	8521+HWDA	1 381	8522+HWDA	2 761
Warning plates with LED lights	8000+LED4	391	8000+LED4	391

Mounted disc harrow with rubber disc protection (trailed option)







Standard equipment:

- 3-point linkage cat. III
- Mechanical adjustment of working depth on the roller
- Discs rubber protection Ø 50mm
- Hydraulic folding to the transport position
- Mechanical transport safety lock (turnbuckle)
- Side screens with height adjustment
- Transport width less than 3,0m

Version N

2 rows of toothed discs ø 560mm, row spacing 100cm, 2 side discs ø 510mm, tubular roller ø 500mm, disc working depth up to 15cm

Version Na

2 rows of toothed discs ø 610mm, row spacing 100cm, 2 extreme discs ø 560mm, tubular roller ø 600mm, disc working depth up to 20cm

Ref. No.	Working width[m]	Disc diameter [mm]	Number of discs [pcs.]	Powerdemand [HP]	Weight [kg]	Price€
8523N	4,0	560	32	130-160	3122	24 708
8523Na	4,0	610	32	130-160	3240	26 914
8524N	4,5	560	36	150-180	3401	27 394
8524Na	4,5	610	36	150-180	3536	29 778
8525N	5,0	560	40	160-190	3704	30 106
8525Na	5,0	610	40	160-190	3856	32 924
8526N	6,0	560	48	170-210	4230	37 311
8526Na	6,0	610	48	170-210	4416	40 681

Mounted disc harrow with rubber disc protection (trailed option)

Optional equipment	4,0 m	Price€	4,5 m	Price€	5,0m	Price€	6,0m	Price€
Row of harrow springs mounted behind the roller	8523+BSF	2 684	8524+BSF	2 684	8525+BSF	3 381	8526+BSF	3 381
Row of harrow springs mounted at the front of the roller	8523+SF	2 684	8524+SF	2 684	8525+SF	3 381	8526+SF	3 381
Tubular roller Ø 600 mm (for version with discs 560 mm)	8523+TR600	774	8524+TR600	897	8525+TR600	1 020	8526+TR600	1 263
For tubular roller Ø 500 mm thick ,3wall tubes Ø 48,3x6	8523+TR500/6,3	487	8524+TR500/6,3	553	8525+TR500/6,3	610	8526+TR500/6,3	736
For tubular roller Ø 500 mm wall tubes Ø 48,3x6	8523+TR600/6.3	1 364	8524+TR600/6.3	1 556	8525+TR600/6.3	1 750	8526+TR600/6.3	2 138
Packer rollerØ 500 mmm	8523+PR500	1 506	8524+PR500	1 670	8525+PR500	1 875	8526+PR500	2 192
Packer roller Ø 600 mm	8523+PR600	2 930	x		x		x	
V ring roller Ø 500 mm with scrapers	8523+VR500	3 119	8524+VR500	3 472	8525+VR500	3 802	8526+VR500	4 502
V ring roller Ø 600 mm with scrapers	8523+VR600	4 275	8524+VR600	4 745	8525+VR600	5 245	8526+VR600	6 205
FLEX roller Ø 500 mm	8523+SR500	3 789	8524+SR500	3 966	8525+SR500	4 152	8526+SR500	4 516
FLEX roller Ø 550 mm	8523+SR550	4 070	8524+SR550	4 554	8525+SR550	5 043	8526+SR550	6 024
Rubber roller Ø 500 mm	8523+RR500	5 450	8524+RR500	5 910	8525+RR500	6 347	8526+RR500	7 246
T ring roller Ø 500 mm	8523+TRR500	3 119	8524+TRR500	3 472	8525+TRR500	3 802	8526+TRR500	4 502
T ring rollerØ 600 mm	8523+TRR600	4 275	8524+TRR600	4 745	8525+TRR600	5 245	8526+TRR600	6 205
Flat bar roller Ø 500 mm	8523+FBR500	651	x		x		x	
Flat bar roller Ø 600 mm	8523+FBR600	1 471	8524+FBR600	1 629	8525+FBR600	1 791	8526+FBR600	2 119
Toothed flat bar roller Ø 500 mm	8523+FBRT500	1 389	x		x		x	
Toothed flat bar roller Ø 600 mm	8523+FBRT600	1 955	8524+FBRT600	2 239	8525+FBRT600	2 564	8526+FBRT600	3 133
Toothed pack ring roller Ø 600 mm	8523+FUST600	6 831	8524+FUST600	7 454	8525+FUST600	7 970	8526+FUST600	9 143
Tandem roller (tubular Ø 500 mm, flat bar Ø 300mm)	8523+TAR5/3	2 564	8524+TAR5/3	2 769	8525+TAR5/3	3 012	8526+TAR5/3	3 420
Tandem roller (tubular Ø 500 mm, flat bar Ø 400mm	8523+TAR5/4	3 166	8524+TAR5/4	3 417	8525+TAR5/4	3 713	8525+TAR5/4	4 191
Tandem U ring roller Ø500mm	8523+TANC500	6 191	8524+TANC500	6 806	8525+TANC500	7 462	8525+TANC500	8 856
Tandem U ring roller Ø600mm	8523+TANC600	8 655	8524+TANC600	9 384	8525+TANC600	10 250	8525+TANC600	12 072
Maintenance free hubs SKF	8523+MFHSKF	1 441	8524+MFHSKF	1 629	8525+MFHSKF	1 834	8526+MFHSKF	2 236

Optional equipment	4,0 m	Price€	4,5 m	Price€	5,0m	Price€	6,0m	Price€
Hydraulic adjustment of working depth	8523+HWDA	2 761	8523+HWDA	2 761	8523+HWDA	2 761	8523+HWDA	2 761
Mechanical semi automatic safety blockade of the side wings (by means of a cord)	8523+SMB	528	8523+SMB	528	8525+SMB	-	8525+SMB	-
Transport chassis with drawbar and front support wheels and wheels in front of the roller (400/60 15,5 wheels) excludes the use of a row of harrow springs in front of the roller	8523+VFR	13 869	8523+VFR	13 869	8525+VFR	15 079	8525+VFR	15 079
Transport chassis with drawbar and front support wheels and wheels behind the roller	8523+TV	11 461	8523+TV	11 461	8523+TV	11 461	8523+TV	11 461
Hydraulic brakes	8523+HBS	1 732	8523+HBS	1 732	8523+HBS	1 732	8523+HBS	1 732
Pneumatic braking system	8523+PBS	On request	8523+PBS	on request	8523+PBS	on request	8523+PBS	on request
Front support wheels	8523+FW	1 804	8523+FW	1 804	8523+FW	1 804	8523+FW	1 804
Hydraulic adjustment of drawbar height	8523+HDA	On request	8523+HDA	On request	8523+HDA	On request	8523+HDA	On request
Ball hitch (hydraulic drawbar version)	8523+BH	On request	8523+BH	On request	8523+BH	On request	8523+BH	On request
Hitch with drawbar eye (hydraulic drawbar version)	8523+EH	On request	8523+EH	On request	8523+EH	On request	8523+EH	On request
Safety wedges (to put under wheels) 2 pieces set	8523+WW	On request	8523+WW	On request	8523+WW	On request	8523+WW	On request
Beam with warning signs and LED lights mounted version (REAR)	8000+LED1	547	8000+LED1	547	8000+LED1	547	8000+LED1	547
Beam with warning signs and LED lights trailed version (REAR)	8000+LED2	432	8000+LED2	432	8000+LED2	432	8000+LED2	432
Beam with warning signs and LED lights trailed version (FRONT + REAR)	8000+LED3	774	8000+LED3	774	8000+LED3	774	8000+LED3	774

Mounted disc harrow RX with rubber disc protection







Standard equipment:

- 3-point linkage cat. III
- 2 rows of discs with a diameter of o 560 mm
- Disc safety device: rubber shock absorber
- Mechanical working depth adjustment
- Side screens with height adjustment
- Row spacing 95 cm fixed version and 100 cm folding version
- Tubular roller ø Ø500mm
- Hydraulic folding from 4m

Ref. No.	Working width [m]	Disc diameter [mm]	Row spacing [mm]	Number of discs [pcs]	Power demand [HP]	Weight[kg]	Price €
8521RX	3,0	560	950	24	80-110	1240	9 246
8522RX	3,5	560	950	28	90-120	1370	10 662
8523RX	4,0	560	1000	32	130-150	3050	17 743
8524RX	4,5	560	1000	36	150-180	3500	19 867
8525RX	5,0	560	1000	40	160-200	3850	22 907
8526RX	6,0	560	1000	48	180-250	4650	26 882

Mounted disc harrow RX with rubber disc protection

Optional equipment	8521RX	Price €	8522RX	Price €	8523RX	Price €
T ring roller Ø 500mm with scrapers	8521RX+TRR500	2 000	8522RX+TRR500	2 416	8523RX+TRR500	2 583
Tubular roller Ø 600mm	8521RX+TR600	625	8522RX+TR600	833	8523RX+TR600	1 042
Row of harrow springs mounted behind the roller	8521RX+BSF	on request	8522RX+BSF	on request	8523RX+BSF	on request
Packe rollerr Ø 600mm	8521RX+PR600	1 666	8522RX+PR600	2 083	8523RX+PR600	2 833
Packer roller Ø 500mm	8521RX+PR500	833	8522RX+PR500	1 000	8523RX+PR500	1 167
Hydraulic adjustment of working depth (on the roller)	8521RX+HWDA	833	8522RX+HWDA	1 250	8523RX+HWDA	1 791
Toothed pack ring roller Ø 600mm	8521RX+FUST600	3 249	8522RX+FUST600	3 666	8523RX+FUST600	4 082
Flat bar roller Ø 500mm	8521RX+FBR500	625	8522RX+FBR500	833	8523RX+FBR500	1 042
Discs Ø 610mm	8521RX+D610	1 375	8522RX+D610	1 375	8523RX+D610	2 000
U ring roller Ø 500mm with scrapers	8521RX+CRR500	2 208	8522RX+CRR500	2 291	8523RX+CRR500	2 916
V ring roller Ø 600mm with scrapers	8521RX+VR600	2 416	8522RX+VR600	2 416	8523RX+VR600	2 708
Row of harrow springs mounted in front of the roller	8521RX+SF	on request	8522RX+SF	on request	8523RX+SF	on request
V ring roller Ø 500mm with scrapers	8521RX+VR500	1 666	8522RX+VR500	1 833	8523RX+VR500	2 166
LED Lights	8000RX+LED1	334	8000RX+LED1	334	8000RX+LED2	750

Optional equipment	8524RX	Price €	8525RX	Price €	8526RX	Price €
T ring roller Ø 500mm with scrapers	8524RX+TRR500	2 916	8525RX+TRR500	3 249	8526RX+TRR500	3 874
Tubular roller Ø 600mm	8524RX+TR600	1 167	8525RX+TR600	1 333	8526RX+TR600	1 583
Row of harrow springs mounted behind the roller	8524RX+BSF	on request	8525RX+BSF	on request	8526RX+BSF	on request
Packer roller Ø 600mm	8524RX+PR600	3 207	8525RX+PR600	3 541	8526RX+PR600	4 249
Packer roller Ø 500mm	8524RX+PR500	1 333	8525RX+PR500	1 458	8526RX+PR500	1 750
Hydraulic adjustment of working depth (on the roller)	8524RX+HWDA	1 791	8525RX+HWDA	1 791	8526RX+HWDA	1 791
Toothed pack ring roller Ø 600mm	8524RX+FUST600	4 582	8525RX+FUST600	5 102	8526RX+FUST600	6 123
Flat bar roller Ø 500mm	8524RX+FBR500	1 167	8525RX+FBR500	1 333	8526RX+FBR500	1 583
Discs Ø 610mm	8524RX+D610	2 249	8525RX+D610	2 499	8526RX+D610	2 999
U ring roller Ø 500mm with scrapers	8524RX+CRR500	3 291	8525RX+CRR500	3 666	8526RX+CRR500	4 374
V ring roller Ø 600mm with scrapers	8524RX+VR600	3 624	8525RX+VR600	3 999	8526RX+VR600	4 832
Row of harrow springs mounted in front of the roller	8524RX+SF	1 500	8525RX+SF	1 875	8526RX+SF	1 958
V ring roller Ø 500mm with scrapers	8524RX+VR500	2 499	8525RX+VR500	2 749	8526RX+VR500	3 332
Rear boom with LED lights	8000RX+LED2	750	8000RX+LED2	750	8000RX+LED2	750

Mounted disc harrow with leaf spring disc protection







Standard equipment:

- 3-point linkage
- 2 disc rows ø 560mm on leaf springs 100x13x10mm
- Row spacing 70cm fixed version or 90cm folding version
- Sealed bearings
- Mechanical working depth adjustment
- Side screens
- Tubular roller ø 460mm
- Hydraulic folding in 2 parts from 4m

Ref. No.	Working width [m]	Number of discs [pcs.]	Power demand [HP]	Weight [kg]	Price €
8521ZS	3,0	24	80	1100	10 923
8522ZS	3,5	28	100	1200	13 851
8523ZS	4,0 H	32	120	2900	23 423
8524ZS	4,5 H	36	130	3300	25 393
8525ZS	5,0 H	40	140	3600	27 927
8526ZS	6,0 H	48	170	4200	31 586

Mounted disc harrow with leaf spring disc protection

Optional equipment	3,0 [m]	Price €	3,5 [m]	Price €
V-ring roller Ø600 mm with scrapers and paddles	8521ZS+VR600PA	3 266	8522zs+VR600PA	3 660
V ring roller Ø 600mm with scrapers	8521ZS+VR600	2 928	8522zs+VR600	3 322
V-ring roller Ø500 mm with scrapers and paddles	8521ZS+VR500PA	2 647	8522zs+VR500PA	2 861
V ring roller Ø 500mm with scrapers	8521ZS+VR500	2 309	8522zs+VR500	2 478
FLEX roller Ø 470mm	8521ZS+SR470	2 309	8522zs+SR470	2 478
FLEX roller Ø 550mm	8521ZS+SR550	3 153	8522zs+SR550	3 435
Row of harrow springs mounted in front of the roller Ø10mm	8521ZS+SF	withought extra charge	8522zs+SF	withought extra charge
Rubber roller Ø360mm	8521ZS+RR360	1 127	8522zs+RR360	1 070
Packer roller Ø 400mm	8521ZS+PR	2 309	8522zs+PR	2 478
Toothed pack ring roller Ø 600mm	8521ZS+FUST	5 687	8522zs+FUST	6 813
Tandem U ring roller Ø500mm	8521ZS+TANDC	4 111	8522zs+TANDC	4 955
U ring roller Ø500mm	8521ZS+CR500	1 915	8522zs+CR500	2 196
U ring roller Ø600mm	8521ZS+CR600	2 647	8522zs+CR600	3 097
Hydraulic adjustment of working depth (on the roller)	8521ZS+HWDA	901	8521zs+HWDA	901
Discs Ø 610mm	8521ZS+D610	1 690	8522zs+D610	1 971
Discs spacing 90cm	8521ZS+PS	507	8522zs+PS	564
Lights	8000+LED13	620	8000+LED13	620

Optional equipment	4,0 H [m]	Price €	4,5 H [m]	Price €
V-ring roller Ø600 mm with scrapers and paddles	8523zs+VR600PA	4 674	8524zs+VR600PA	5 518
V ring roller Ø 600mm with scrapers	8523zs+VR600	4 280	8524zs+VR600	5 068
V-ring roller Ø500 mm with scrapers and paddles	8523zs+VR500PA	3 491	8524zs+VR500PA	4 280
V ring roller Ø 500mm with scrapers	8523zs+VR500	3 097	8524zs+VR500	3 829
FLEX rollerØ470 mm	8523zs+SR470	3 379	8524zs+SR470	3 998
FLEX rollerØ550 mm	8523zs+SR550	4 843	8524zs+SR550	5 581
Row of harrow springs mounted in front of the roller Ø10mm	8523zs+SF	1690	8524zs+SF	1 915
Rubber roller Ø360mm	8523zs+RR360	1 352	8524zs+RR360	1 802
Packer roller Ø 400mm	8523zs+PR	3 379	8524zs+PR	3 998
Toothed pack ring roller Ø 600mm	8523zs+FUST	8 390	8524zs+FUST	9 685
Tandem U ring roller Ø500mm	8523zs+TANDC	7 601	8524zs+TANDC	8 502
U ring roller Ø500mm	8523zs+CR500	2 703	8524zs+CR500	3 153
U ring roller Ø600mm	8523zs+CR600	3 998	8524zs+CR600	3 929
Hydraulic adjustment of working depth (on the roller)	8523zs+HWDA	1 746	8523zs+HWDA	1 746
Discs Ø 610mm	8523zs+D610	2 253	8524zs+D610	2 534
Discs spacing 90cm	8523zs+PS	withought extra charge	8523zs+PS	withought extra charge
Lights	8000+LED14	901	8000+LED14	901

Mounted disc harrow with leaf spring disc protection

Optional equipment	5,0 H [m]	Price €	6,0 H [m]	Price €
V-ring roller Ø600 mm with scrapers and paddles	8525zs+VR600PA	5 969	8526zs+VR600PA	6 831
V ring roller Ø 600mm with scrapers	8525zs+VR600	5 406	8526zs+VR600	6 138
V-ring roller Ø500 mm with scrapers and paddles	8525zs+VR500PA	4 561	8526zs+VR500PA	4 349
V ring roller Ø 500mm with scrapers	8525zs+VR500	3 998	8526zs+VR500	4 674
FLEX roller Ø 470mm	8525zs+SR470	3 998	8526zs+SR470	4 392
FLEX roller Ø 5500mm	8525zs+SR550	5 631	8526zs+SR550	6 194
Row of harrow springs mounted in front of the roller Ø10mm	8525zs+SF	2 140	8526zs+SF	2 647
Rubber roller Ø360mm	8525zs+RR360	1 633	8526zs+RR360	1 746
Packer roller Ø 400mm	8525zs+PR	3 998	8526zs+PR	4 392
Toothed pack ring roller Ø 600mm	8525zs+FUST	10 473	8526zs+FUST	12 556
Tandem U ring roller Ø500mm	8525zs+TANDC	8 784	8526zs+TANDC	11 092
U ring roller Ø500mm	8525zs+CR500	3 041	8526zs+CR500	3 322
U ring roller Ø600mm	8525zs+CR600	4 448	8526zs+CR600	4 843
Hydraulic adjustment of working depth (on the roller)	8523zs+HWDA	1 746	8523zs+HWDA	1 746
Discs Ø 610mm	8525zs+D610	2 816	8526zs+D610	3 097
Discs spacing 90cm	8523zs+PS	withought extra charge	8523zs+PS	withought extra charge
Lights	8000+LED14	901	8000+LED14	901

Mounted disc harrow X-Cross







Standard equipment:

- 3-point-linkage cat. II and III for the mounted version
- Drawbar with beam cat. III for the semi-mounted version
- 2 rows of X-CROSS discs 440 mm
- Row spacing 90 cm
- Hydraulic working depth adjustment on the roller
- Maintenance-free 4-hole hub
- Tubular roller Ø 500 mm
- Working depth: 2-3 cm
- Side screens with height adjustment
- Disc safety device: rubber shock absorber Ø 40mm
- Transport width less than 3.0 m (except for the fixed version with 3.5 m and 4.0 m)
- Air brake as standard for 5m and 6m

Mounted disc harrow X-Cross

Ref. No.	Working width [m]	Folding	Number of discs [pcs.]	Power demand [HP]	Weight [kg]	Price €
8551	3,0 m	-	24	110	1480	**15 494**
8552	3,5 m	-	28	130	1720	**18 371**
8553	4,0 m	-	32	150	2045	**21 403**
8553H	4,0 m H	Hydraulic	32	150	2890	**30 524**
8554H	4,5 m H	Hydraulic	36	160	3175	**34 952**
8553HVFR	4,0 m HP	Hydraulic + chassis	32	150	3900	**44 930**
8554HVFR	4,5 m HP	Hydraulic+ chassis	36	160	4340	**51 098**
8555HVFR	5,0 m HP	Hydraulic + chassis	40	180	4780	**59 590**
8556HVFR	6,0 m HP	Hydraulic+ chassis	48	200	5300	**69 686**

Optional equipment	3,0 m	Price €	3,5 m	Price €	4,0 m	Price €	4,0 m / H / HVFR	Price €	4,5 m / H / HVFR	Price €	5,0 m /H/ HVFR	Price€	6,0m HVFR	Price €
Row of harrow springs mounted behind	8551+SF	**1 204**	8552+SF	**1 417**	8553+ SF	**1 633**	8553+SF	**1 633**	8554+SF	**1 891**	8555+SF	**2 112**	8556+SF	**2 533**
Maintenance free hubs SKF	8551+MFHSKF	**942**	8552+MFHSKF	**1 092**	8553+MFHSKF	**1 250**	8553+MFHSKF	**1 250**	8554+MFHSKF	**1 404**	8555+MFHSKF	**1 558**	8556+ MFHSKF	**1 875**
Pneumatic braking system	x		x		x		8553+PBS	**2 728**	8553+PBS	**2 728**	Standard		Standard	
Hydraulic brakes	x		x		x		8553+HBS	**3 124**	8553+HBS	**3 124**	Standard		Standard	
V-Ring roller Ø 500mm	7900+VR500	**1 217**	7902+VR500	**1 850**	7902+VR500	**1 850**	7905+VR500	**2 070**	7907+VR500	**2 483**	7907+VR500	**2 483**	7908+VR500	**2 887**
V-Ring roller Ø600mm	7900+VR600	**1 396**	7902+VR600	**2 070**	7902+VR600	**2 070**	7905+VR600	**2 299**	7907+VR600	**2 791**	7907+VR600	**2 791**	7908+VR600	**3 241**
Tandem U-Ring Ø 540mm	7900+PRR500	**3 153**	7902+PRR500	**4 432**	7902+PRR500	**4 432**	7905+PRR500	**4 686**	7907+PRR500	**5 719**	7907+PRR500	**5 719**	7908+ PRR500	**6 760**
Rear beam with LED lighting							8000+LED11	**771**						

Stubble 2 row cultivator

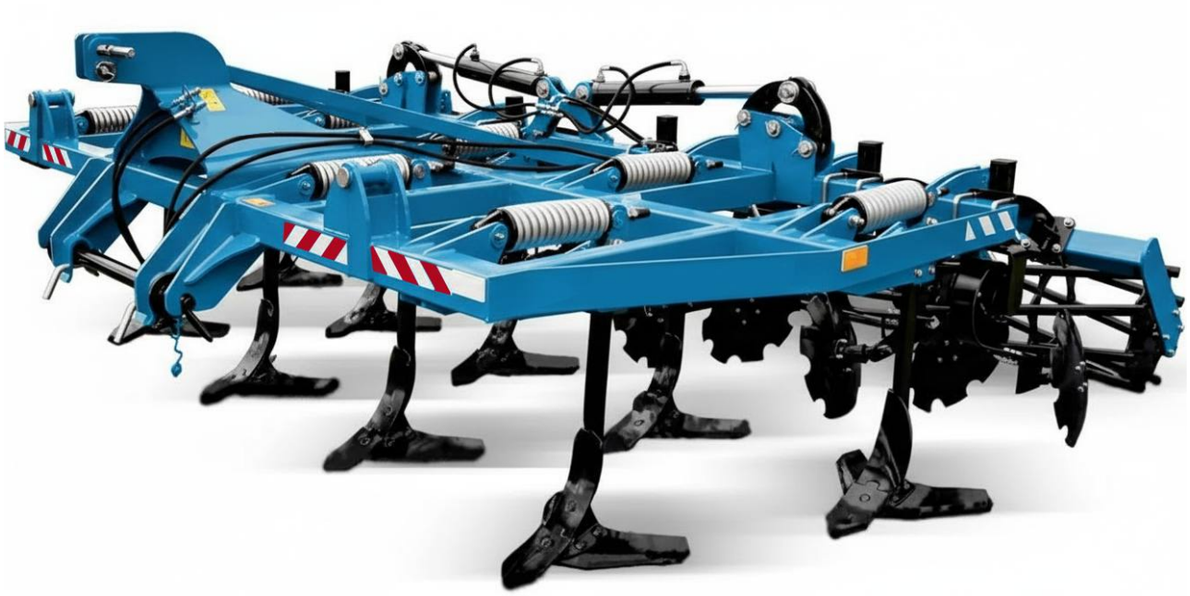



Standard equipment:

- 3-point linkage with drawbar
- 2 rows of tines, height 850 mm
- Coulter width 460 mm
- 100 cm clearance under the frame
- Row of scraper discs with a diameter of ø 460mm
- Tubular shaft
- Pin or spring tooth protection
- 3,,8 m version, hydraulically foldable

Ref.No.	Working width [m]	Protection	Power demand [HP]	Weight[kg]	Number of tines [pcs.]	Price€
8333FA	3,0 m	bolts	100-130	990	7	6 443
8333FAS	3,0 m	springs	100-130	1290	7	8 395
8334FA	3,8 m H	bolts	130-160	1750	9	11 324
8334FAS	3,8 m H	springs	130-160	2100	9	12 963
8335AS	4,7 m H	springs	160-180	2820	11	15 267

Optional equipment	3,0m	Price€	3,8m	Price€	4,7m	Price€
V ring roller	8333FA+VR500	1 601	8334FA+VR500	2 304	334FA+VR500	2 304
T ring roller	8333FA+TRR500	1 601	8334FA+TRR500	2 304	8334FA+TRR500	2 304
U ring roller	8333FA+CRR500	1 601	8334FA+CRR500	2 304	8334FA+CRR500	2 304
Ring roller	8333FA+SR	1 601	-	-	-	-
LED lights	8000+LED11	489	8000+LED11	489	8000+LED11	489

Stubble 2 row cultivator RX





Standard equipment:

- 3-point linkage cat. II and III
- 2 rows of tines with wings
- Shear or spring tine protection
- 1 row of toothed discs ø 460 mm
- Tubular roller ø 500 mm

Optional equipment	2,6 m	Price€	3,0 m	Price€
Tubular roller Ø 600mm	8332RX+TR600	625	8333RX+TR600	625
Flat bar roller Ø 500mm	8332RX+FBR500	625	8333RX+FBR500	625
V ring roller Ø 500mm with scrapers	8332RX+VR500	1 666	8333RX+VR500	1 666
V ring roller Ø 600mm with scrapers	8332RX+VR600	2 416	8333RX+VR600	2 416
U ring roller Ø 500mm with scrapers	8332RX+CRR500	2 208	8333RX+CRR500	2 208
T ring roller Ø 500mm with scrapers	8332RX+TRR500	2 000	8333RX+TRR500	2 000
Toothed pack ring roller Ø 600mm	8332RX+FUST600	3 249	8333RX+FUST600	3 249
LED Lights	-	-	8000RX+LEDX1	334

Ref. No.	Working width [m]	Protection	Power demand [HP]	Weight [kg]	Number of tines [pcs.]	Number of discs [pcs]	Price€
8332RX	2,6 m	Bolts	90-110	940	6	7	**5 956**
8332ARX	2,6m	Springs	90-110	940	6	7	**9 163**
8333RX	3,0m	Bolts	120-140	1020	7	8	**6 498**
8333ARX	3,0 m	Springs	120-140	1020	7	8	**9 788**

Stubble 3-beam cultivator



Standard equipment

- 3-point linkage, cat. II and III
- Working depth up to 35 cm
- Ground clearance under the frame 92 cm
- Hollow discs Ø 460 mm
- Tubular roller 500 mm
- Hydraulic working depth adjustment

Ref. No.	Working width [m]	Number of tines [pcs.]	Power demand [HP]	Weight [kg]	Price[€]
83050N	3,0	10	150	1820	**15 025**
83070N	4,2	14	200	3350	**27 816**
83080N	4,8	16.	240	3850	**34 719**
83090N	5,4	18	290	4170	**42 029**
83100N	6,3	21	400	6650	**52 586**

Stubble 3-beam cultivator

Optional equipment	3,0m	Price[€]	4,2m	Price [€]	4,8m	Price [€]	5,4m	Price [€]	6,3m	Price [€]
V-ring roller 600 mm with scrapers	8305ON+VR600	2 416	8307ON+VR600	2 193	8308ON+VR600	2 681	8309ON+VR600	3 046	8310ON+VR600	3 371
Packer roller Ø 500mm	8305ON+PR500	1 317	8307ON+PR500	1 780	8308ON+PR500	1 944	8309ON+PR500	2 109	8310ON+PR500	2 636
C-ring roller Ø 600mm with scrapers	8305ON+CR600	1 909	8307ON+CR600	2 599	8308ON+CR600	3 208	8309ON+CR600	3 533	8310ON+CR600	4 061
Fusion roller Ø 600mm	8305ON+FUS600	3 062	8307ON+FUS600	4 270	8308ON+FUS600	4 626	8309ON+FUS600	4 981	8310ON+FUS600	6 123
Single-row drag harrow	8305ON-SLB	1 422	8307ON-SLB	1 665	8308ON-SLB	1 828	8309ON-SLB	1 950	8310ON-SLB	2 153
Hydraulic safety mechanism	8305ON-OHP	1 828	8307ON-OHP	3 249	8308ON-OHP	4 061	8309ON-OHP	3 249	8310ON-OHP	6 092
LED-lights	8000+LED10	407	8000+LED10	407	8000+LED10	407	8000+LED10	407	8000+LED10	407



Hydraulic folding from 4.2 m

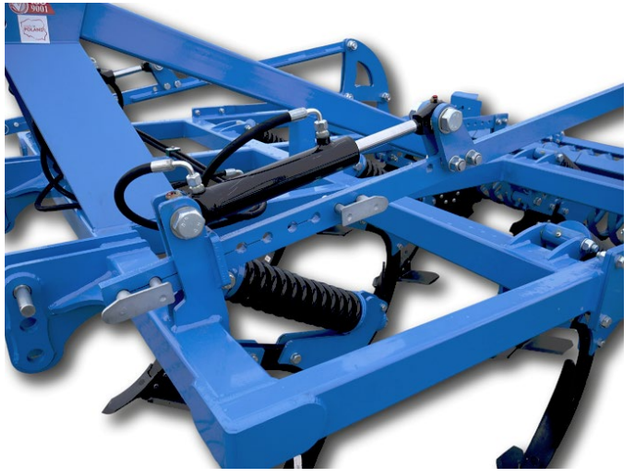

Hydraulic working depth adjustment



Hollow discs with rubber suspension

Stubble 3 row cultivator RX





Standard equipment:

- 3-point linkage cat. II and III
- 3 rows of tines with wing coulter
- Tines spring protection or bolt protection
- 1 row of toothed scarping discs ø 460 mm with rubber protection
- Tubular roller / flat bar roller smooth or toothed ø 500mm ø 500 mm

Ref. No.	Working width [m]	Protection	Weight [kg]	Number of discs [pcs.]	Number of tines [pcs.]	Power demand [HP]	Price €
8304RX	2,6	bolts	1400	6	8	110-150	On request
8305RX	3,0	bolts	1700	8	10	130-170	On request
8306RX	3,5	bolts	2000	9	12	150-190	On request
8307RX	4,0 fix	bolts	2400	10	13	170-200	On request
8304ARX	2,6	springs	1400	6	8	110-150	11 662
8305ARX	3,0	springs	1700	8	10	130-170	12 391
8306ARX	3,5	springs	2000	9	12	150-190	13 494
8307ARX	4,0 fix	springs	2400	10	13	170-200	14 567

Stubble 3 row cultivator RX

Optional equipment	2,6 [m]	Price €	3,0 [m]	Price €	3,5 [m]	Price €	4,0 [m]	Price €
Toothed pack ring roller Ø 600mm	8304RX+FUST600	3 249	8305RX+FUST600	3 249	8306RX+FUST600	3 666	8307RX+FUST600	4 082
V ring roller Ø 600mm with scrapers	8304RX+VR600	2 416	8305RX+VR600	2 416	8306RX+VR600	2 416	8307RX+VR600	2 708
U ring roller Ø 500mm with scrapers	8304RX+CRR500	2 208	8305RX+CRR500	2 208	8306RX+CRR500	2 291	8307RX+CRR500	2 916
Flat bar roller Ø 500mm	8304RX+FBR600	833	8305RX+FBR600	833	8306RX+FBR600	833	8307RX+FBR600	1 042
Packer roller Ø 500mm	8304RX+PR500	1 000	8304RX+PR500	1 000	8306RX+PR500	2 166	8306RX+PR500	2 166
Packer roller Ø 600mm	8304RX+PR600	1 916	8304RX+PR600	1 916	8306RX+PR600	2 708	8306RX+PR600	2 708
Tubular roller Ø 600mm	8304RX+TR600	833	8305RX+TR600	833	8306RX+TR600	833	8307RX+TR600	1 042
T ring roller Ø 500mm with scrapers	8304RX+TRR500	2 249	8305RX+TRR500	2 249	8306RX+TRR500	2 583	8307RX+TRR500	2 583
V ring roller Ø 500mm with scrapers	8304RX+VR500	1 666	8305RX+VR500	1 666	8306RX+VR500	1 833	8307RX+VR500	2 166
Hydraulic adjustment of working depth (on the roller)			8305RX+HWDA	833			8307RX+HWDA	1 250
LED Lights			8000RX+LED1			334		

Stubble 3 row cultivator







Standard equipment

- 3-point linkage cat. III
- 3 rows of spiral tines 35x35mm with double heart coulter
- Working depth: up to 15cm
- Transport width up to 3.0m
- Hydraulically foldable for transport from 4.0m

Ref. No.	Workingwidth [m]	Number of tines [pcs.]	Power demand [HP]	Weight [kg]	Price €
8493TS	3,0	13	100-130	1276	10 386
8494TS	4,0	17	130-150	2215	17 493
8495TS	5,0	21	160-210	2568	22 959

Optional equipment	3,0 [m]	Price €	4,0 [m]	Price €	5,0 [m]	Price €
Tubular roller Ø 600 mm	8493TS+TR600	632	8494TS+TR600	774	8495TS+TR600	1 020
V Ring roller with scrapers Ø 600 mm	8493TS+VR600	3 119	8494TS+VR600	4 275	8495TS+VR600	5 245
Packer roller Ø 500 mm	8493TS+PR500	1 107	8494TS+PR500	1 506	8495TS+PR500	1 875
Flat bar roller Ø 500 mm	8493TS+FBR500	471	8494TS+FBR500	651	x	
Pack ring roller Ø 600 mm	8493TS+FUS600	4 554	8494TS+FUS600	6 831	8495TS+FUS600	7 970
Row of harrow springs behind of the roller	8493TS+SF	1 258	8494TS+SF	1 804	8495TS+SF	2 351
Warning plates with LED lights	8000+LED4	391	8000+LED4	391	8000+LED4	391

Universal 4 row cultivator





Standard equipment:

- 3-point linkage cat. II with hitch beam for working width 3.0 m and 4.0 m
- 3-point linkage cat. III with linkage beam for working width 5.0 m and 6.0 m
- 4 rows of S-type 45 x 12 cultivation tines with standard double coulter
- Tubular roller Ø 540 mm with mechanical working depth adjustment
- Hydraulic folding from 4.0 m (approx. 90°)
- Hydraulic transport safety lock
- Working depth up to 12 cm
- Transport width up to 3.0 m

Ref. No.	Working width [m]	Number of tines [pcs.]	Power demand [HP]	Weight [kg]	Price €
8485TS	3,0	18	90-110	813	**7 380**
8486TS	4,0	26	105-115	1675	**12 136**
8487TS	5,0	32	130-140	1879	**13 666**
8488TS	6,0	38	160-170	2306	**15 197**

Optional equipment	3,0 [m]	Price €	4,0 [m]	Price €	5,0 [m]	Price €	6,0 [m]	Price €
Cultivator tines 60x12 with straight double coulter	8485TS+CT60	**656**	8486TS+CT60	**984**	8487TS+CT60	**1 203**	8488TS+CT60	**1 422**
Cultivator tines 70x12 with straight double coulter	8485TS+CT70	**820**	8486TS+CT70	**1 203**	8487TS+CT70	**1 476**	8488TS+CT70	**1 750**
Duck foot coulter	8485TS+DF	**296**	8486TS+DF	**400**	8487TS+DF	**482**	8488TS+DF	**585**
Tubular roller Ø 600 mm	8485TS+TR600	**651**	8486TS+TR600	**796**	8487TS+TR600	**1 039**	8488TS+TR600	**1 301**
V Ring roller with scrapers Ø 600 mm	8485TS+VR600	**2 428**	8486TS+VR600	**3 324**	8487TS+VR600	**4 081**	8488TS+VR600	**4 841**
Packer roller Ø 500 mm	8485TS+PR500	**1 154**	8486TS+PR500	**1 580**	8487TS+PR500	**1 955**	8488TS+PR500	**2 335**
RPack ring roller Ø 600 mm	8485TS+FUS600	**4 669**	8486TS+FUS600	**6 978**	8487TS+FUS600	**8 173**	8488TS+FUS600	**9 304**
Flat bar roller Ø 500 mm	8485TS+FBR500	**withought extra charge**	8486TS+FBR500	**withought extra charge**	8487TS+FBR500	**withought extra charge**	8488TS+FBR500	**withoght extra charge**
Flat bar roller Ø 600 mm	8485TS+FBR600	**651**	8486TS+FBR600	**796**	8487TS+FBR600	**1 039**	8488TS+FBR600	**1 301**
Row of harrow springs behind of the roller	8485TS+SF	**1 258**	8486TS+SF	**1 804**	8487TS+SF	**2 351**	8488TS+SF	**2 898**
Warning plates with LED lights	8000+LED4	**391**	8000+LED1	**547**	8000+LED1	**547**	8000+LED1	**547**

Seedbed combination with cultivation harrow tines, 4 rows







Standard equipment:

- 3-point linkage, cat. 2 / 3
- 4 rows tines type S 32x10 with straight share
- Track loosener
- Front crumbler roller, Ø 310 mm, smooth
- Double crumbler roller, Ø 340 mm, toothed

Ref.No.	Working width [m]	Number of tines [pcs]	Power demand [HP]	Weight [kg]	Price [€]
8453AH	4,2	42	120-150	1680	11 734
8455AH	5,0	50	150-180	1820	13 471
8456AH	5,6	56	160 <	1980	14 642

Optional equipment	4,2 m	Price [€]	5,0m	Price [€]	5,6m	Price [€]
Goosefoot share for 32x10 tine	8453AH+DF	2 460	8455AH+DF	2 929	8456AH+DF	3 280
Reinforcement for tine type S 32x10	8453AH+TR32	1 640	8455AH+TR32	1 953	8456AH+TR32	2 187
Tine type S 45x12 with 180 mm goosefoot share	8453AH+RT45	2 460	8455AH+RT45	2 929	8456AH+RT45	3 280
LED lighting	8000+LED26	391	8000+LED26	391	8000+LED26	391

Seedbed cultivator mounted/ trailed with rear pin roller





Standard equipment:

- Version attached - 3-point linkage cat. II and III
- Front and rear flat bar roller Ø 340 mm on common frame with mechanical working depth adjustment
- 3 rows of straight cultivator tines 32×12 with straight double coulter
- Rear pin roller Ø 370 mm with scrapers
- Spring-mounted track eradicators with mechanical depth adjustment
- Mechanical working depth adjustment - turnbuckle
- Levelling bar with mechanical adjustment
- Working depth up to 15 cm
- Hydraulic, parallel transport folding from 4.0 m

Ref. No.	Working width [m]	Type	Number of tines 32x12 with coulter [pcs.]	No. of tines 32x12 with duck foot coulter [pcs.]	Power demand [HP]	Weight [kg]	Price €
8472	3,0	Rigid frame	28	20	92-110	1540	**15 198**
8473a	4,0	Rigid frame	38	26	120-140	1980	**19 168**
8473b	4,0	Hydraulic folding	38	26	120-140	2173	**24 675**
8474a	4,5	Hydraulic folding	43	30	145-155	2445	**26 126**
8476	6,0	Hydraulic folding	55	40	170-180	3260	**33 085**

Optional equipment	3,0 [m]	Price €	4,0 [m]	Price €	4,5[m]	Price €	6,0 [m]	Price €
Cultivator S type tines 32x12 with duck foot coulter (width 180mm)	8472+RT32DF	**without add. charge**	8472+RT32DF	**without add. charge**	8472+RT32DF	**without add. charge**	8472+RT32DF	**without add. charge**
Hydraulic adjustment of working depth	8472+HWDA	**1367**	8473A+HWDA	**2050**	8473A+HWDA	**2050**	8476+HWDA	**2733**
Track loosener	8472+TE	**982**	8474+TE	**1 238**	8474+TE	**1 238**	8474+TE	**1 238**
Transport chassis			8473B+TV	**7 172**	8473B+TV	**7 172**	8473B+TV	**7 172**
Warning signs with LED lighting	8000+LED	**641**	8000+LED	**641**	8000+LED	**641**	8000+LED	**641**

Seedbed combination NEO-5, 5-row



Standard equipment:

- 3-point linkage, cat. 2 / 3
- 5 rows of tines, type S 45x12 with 150 mm goosefoot share or straight share
- Hydraulic folding
- Tube roller 500 mm

Ref. No.	Working width [m]	No. of tines [pcs.]	Power demand [HP]	Weight [kg]	Price[€]
85140N	4,0	27	100-140	1500	14 253
85150N	5,0	33	140-180	2000	15 878
86160N	6,0	40	180-220	2400	18 558

Seedbed combination NEO-5, 5-row

Optional equipment	4,0m	Price [€]	5,0m	Price [€]	6,0m	Price [€]
Single harrow behind the roller	8514ON+BSF	1 665	8515ON+BSF	1 950	8516ON+BSF	2 153
Double harrow behind the roller	8514ON+DBSF	2 051	8515ON+DBSF	2 802	8516ON+DBSF	3 005
Triple harrow (machine without roller)	8514ON+TBSF	2 518	8515ON+TBSF	3 533	8516ON+TBSF	3 736
4 wheels (machine without roller)	8514ON+DSW	1 300	8515ON+DSW	1 300	8516ON+DSW	1 300
2 wheels (machine with roller)	8514ON+SW	569	8515ON+SW	569	8516ON+SW	569
Front knife roller 420 mm (mechanical adjustment)	8514ON+FLK	5 604	8515ON+FLK	6 782	8516ON+FLK	7 391
Front knife roller 420 mm (hydraulic adjustment)	8514ON+HFLK	6 579	8515ON+HFLK	7 797	8516ON+HFLK	8 366
Front leveling spring tine harrow (mechanical adjustment)	8514ON+FSB	1 645	8515ON+FSB	2 599	8516ON+FSB	2 681
Front leveling spring tine harrow (hydraulic adjustment)	8514ON+FLB	3 046	8515ON+FLB	4 183	8516ON+FLB	4 508
Tandem roller (tube roller 500 mm and/or flat bar roller 500 mm)	8514ON+TAN	2 280	8515ON+TAN	2 951	8516ON+TAN	3 622
Hydraulic working depth adjustment	8514ON+HWDA	1 747	8515ON+HWDA	1 747	8516ON+HWDA	1 747
LED lighting	8000+LED20	508	8000+LED20	508	8000+LED20	508

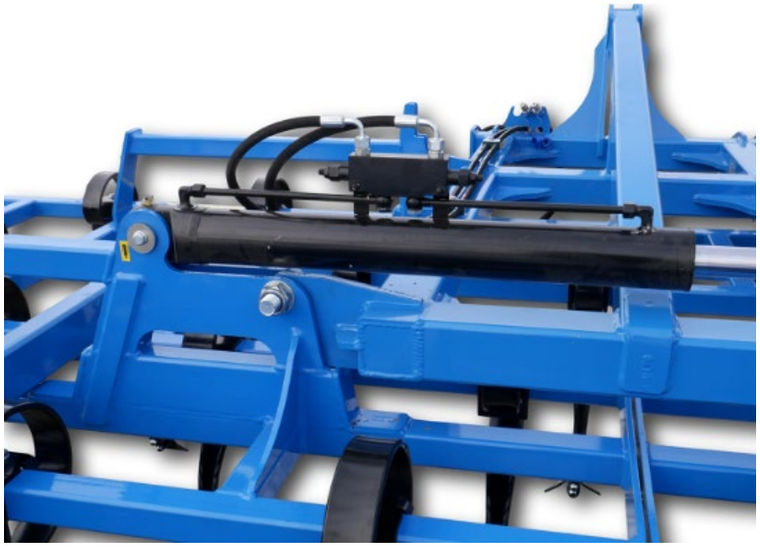

Transport lock



Front leveling spring tine harrow

Tandem knife roller



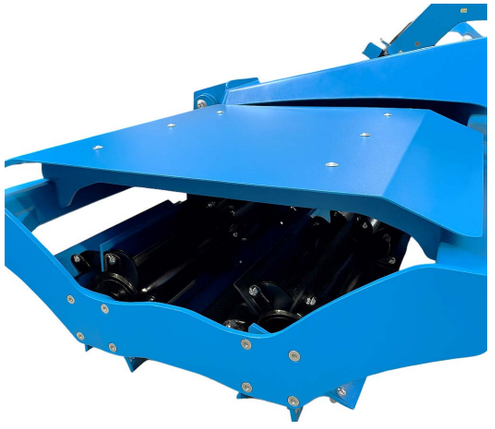

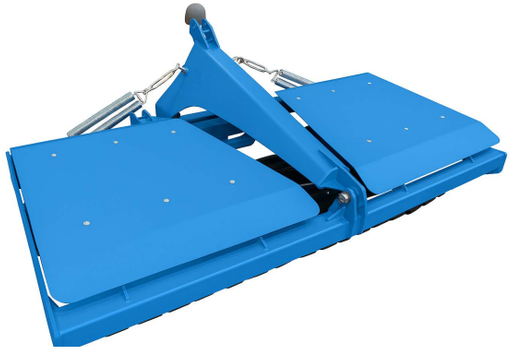

Standard equipment:

- 3-point linkage for front mount
- Tandem knife roller Ø 380 mm with straight blades
- Steering bracket

Ref.No.	Working width [m]	Hydraulic folding	Weight [kg]	Price €
1037AH	1,5	-	510	3 905
1038AH	2,0	-	585	5 272
1039AH	2,5	-	720	6 443
1040AH	3,0	-	850	7 809
1041AH	3,5	-	975	9 567
1042AH	4,0	-	1100	10 738
1042HAH	4,0	+	1700	15 033
1043HAH	5,0	+	1900	18 937
1044HAH	6,0	+	2100	22 842

Optional equipment	Ref.No.	Price €
Additional weight 500 kg	1040AH+EW	1 953
Spiral blades for rigid version	1037AH+HCS	391
Spiral blades for hydraulic version	1042HAH+HCS	781
LED lighting	8000+LED16	586

Front wavy disc roller



Standard equipment:

- 3-point linkage cat. II
- Transport width less than 3.0 m
- 2 rows of wavy discs Ø 520 mm
- Swivel suspension of the main frame
- 2 springs maintaining working position





Ref. No.	Working width [m]	Number of discs [pcs.]	Weight [kg]	Price€
8500	2,5	28	620 - 1300	6 992
8501	2,7	30	700 - 1400	7 125
8502	3,0	32	780 - 1500	7 302

Optional equipment	2,5 m	Price€	2,7 m	Price€	3,0 m	Price€
Front 1 row harrow of cultivator S type tines 32x10 with straight double coulter	8500+FLBS32	1 284	8500+FLBS32	1 284	8500+FLBS32	1 284
Front 1 row harrow of cultivator straight tines 32x10 with straight double coulter	8500+FLB32	1 284	8500+FLB32	1 284	8500+FLB32	1 284
Front 2 rows harrow of cultivator S type tines 32x10 with straight double coulter	8500+DFLBS32	1 948	8500+DFLBS32	1 948	8500+DFLBS32	1 948
Front 2 rows harrow of cultivator straight tines 32x10 with straight double coulter	8500+DFLB32	1 948	8500+DFLB32	1 948	8500+DFLB32	1 948
Front spring levelling board with spring tines 150 mm	8500+FLB150	1 948	8500+FLB150	1 948	8500+FLB150	1 948
Knife drag	8500+FLK	1 948	8500+FLK	1 948	8500+FLK	1 948
Crosskill roller Ø 370 mm	8500+CR	3 895	8501+CR	3 983	8502+CR	3 983
Tubular roller Ø 370 mm	8500+TR	2 434	8501+TR	2 523	8502+TR	2 523
Discs Ø 560 mm	8500+D560	554	8501+D560	554	8502+D560	554
Hydraulic adjustment of working depth of front harrow and spring levelling board (1 section)	8500+HAH	1 748	8500+HAH	1 748	8500+HAH	1 748
LED Lights	8000+LED7	797	8000+LED7	797	8000+LED7	797

Front wavy disc roller, hydraulic folding



Standard equipment:

- 3-point linkage cat. II
- Transport width less than 3.0 m
- 2 rows of wavy discs Ø 520 mm
- Swivel suspension of the main frame
- 2 springs maintaining working position
- Hydraulic folding for transport

Ref. No.	Working width [m]	Number of discs [pcs.]	Weight [kg]	Price €
8503	4,0	43	1250	15 842
8504	4,5	48	1350	17 524
8505	5,0	54	1500	19 958
8506	6,0	64	1750	22 480

Optional equipment	4,0 m	Price€	4,5 m	Price€	5,0 m	Price€	6,0 m	Price€
Front 1 row harrow of cultivator S type tines 32x10 with straight double coulter	8503+FLBS32	2 191	8504+FLBS32	2 434	8505+FLBS32	2 744	8506+FLBS32	3 076
Front 1 row harrow of cultivator straight tines 32x10 with straight double coulter	8503+FLB32	2 191	8504+FLB32	2 434	8505+FLB32	2 744	8506+FLB32	3 076
Front 2 rows harrow of cultivator S type tines 32x10 with straight double coulter	8503+DFLBS32	3 651	8504+DFLBS32	3 983	8505+DFLBS32	4 381	8506+DFLBS32	4 824
Front 2 rows harrow of cultivator straight tines 32x10 with straight double coulter	8503+DFLB32	3 651	8504+DFLB32	3 983	8505+DFLB32	4 381	8506+DFLB32	4 824
Front spring levelling board with spring tines 150mm	8503+FLB150	3 651	8504+FLB150	3 983	8505+FLB150	4 381	8506+FLB150	4 824
Discs Ø 560mm	8503+D560	709	8504+D560	797	8505+D560	974	8506+D560	1 195
Knife drag	8503+FLK	3 651	8504+FLK	3 983	85055+FLK	4 381	8506+FLK	4 824
Hydraulic adjustment of working depth of front harrow and spring levelling board (1 section)	8503+HAH	3 850	8503+HAH	3 850	8503+HAH	3 850	8503+HAH	3 850
LED lights			8000+LED7	797				

Prism packer roller with fixed 3-point-linkage



Standard equipment:

- 3-point linkage, cat. II, fixed
- Ring diameter Ø 530 mm + 480 mm

Ref.No.	Working width [m]	Number of rings [pcs.]	Power demand [HP]	Weight [kg]	Price€
9111AD	3,0	34	120	1150	**10 267**

Prism packer roller with steering 3-point-linkage



Standard equipment:

- 3-point linkage, cat. II, steering
- Ring diameter Ø 530 mm + 480 mm

Ref.No.	Working width [m]	Number of rings [pcs.]	Power demand [HP]	Weight [kg]	Price€
9114AD	3,0	34	120	1200	**10 355**

Optional equipment	Ref.No.	Price€
Single-row cultivator with straight spring tine 32 x 10 with narrow share	8500+FLB32	**1284**
Single-row cultivator with S-type spring tine 32 x 10 with narrow share	8500+FLBS32	**1284**
Two-row cultivator with straight spring tines 32 x 10 with narrow share	8500+DFLB32	**1948**
Two-row cultivator with S-type straight spring tines 32 x 10 with narrow share	8500+DFLBS32	**1948**
Front leveling harrow with leaf spring tines 150 mm	8500+FLB150	**1948**
Knife harrow	8500+FLK	**1948**
Hydraulic working height adjustment of the cultivator (one section)	8500+HAH	**1748**
LED-lighting	8000+LED7	797

Prism packer roller for front and rear mounting with fixed 3-point-linkage



Standard equipment:

- 3-point linkage, cat. II, fixed
- Front and rear mounting
- Ring diameter Ø 530 mm
- Hydraulically foldable

Ref.No.	Working width [m]	Number of rings [pcs.]	Power demand [HP]	Weight [kg]	Price €
9116AD	4,0	32	140	1500	15 842
9117AD	4,5	36	180	1650	17 524
9118AD	5,0	40	200	1850	20090
9119AD	6,0	48	240	2200	22 480

Optional equipment	4,0	Price €	4,5	Price €	5,0	Price €	6,0	Price €
Single-row cultivator with straight spring tines 32 x 10 with narrow share	8503+FLB32	2 191	8504+FLB32	2 434	8505+FLB32	2 744	8506+FLB32	3 076
Single-row cultivator with S-type spring tines 32 x 10 with narrow share	8503+FLBS32	2 191	8504+FLBS32	2 434	8505+FLBS32	2 744	8506+FLBS32	3 076
Two-row cultivator with straight spring tines 32 x 10 with narrow share	8503+DFLB32	3 651	8504+DFLB32	3 983	8505+DFLB32	4 381	8506+DFLB32	4 824
Two-row cultivator with S-type straight spring tines 32 x 10 with narrow share	8503+DFLBS32	3 651	8504+DFLBS32	3 983	8505+DFLBS32	4 381	8506+DFLBS32	4 824
Front leveling harrow with leaf spring tines 150 mm	8503+FLB150	3 651	8504+FLB150	3 983	8505+FLB150	4 381	8506+FLB150	4 824
Knife harrow	8503+FLK	3 651	8504+FLK	3 983	8505+FLK	4 381	8506+FLK	4 824
Hydraulic working height adjustment of the cultivator (one section)	8503+HAH	3 850	8504+HAH	3 850	8505+HAH	3 850	8506+HAH	3 850
LED-lighting	8000+LED7	797	8000+LED7	797	8000+LED7	797	8000+LED7	797

Subsoiler with possibility of tines spacing modification

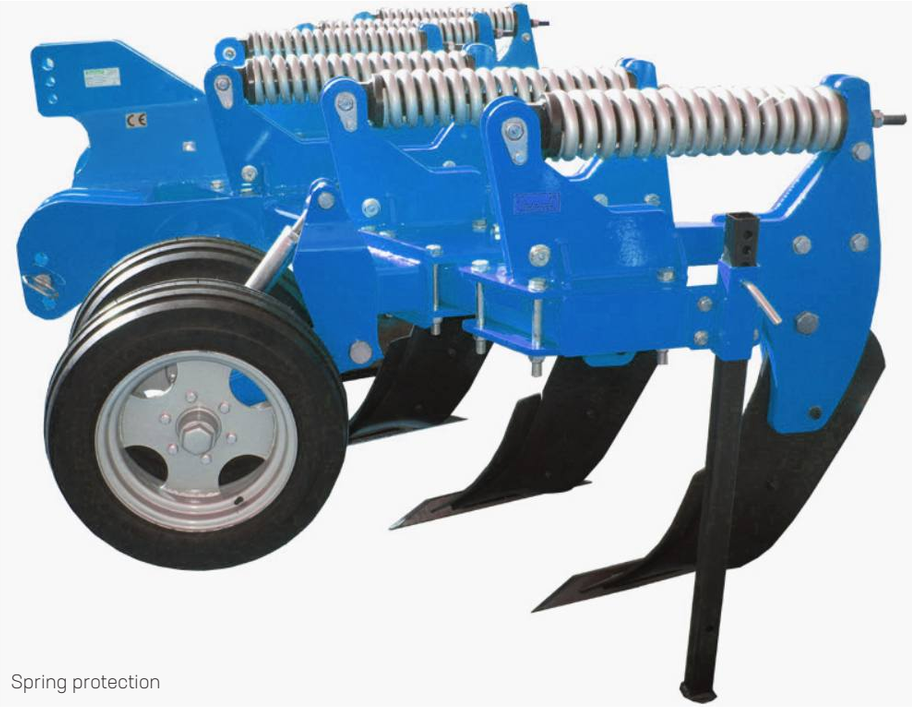

Spring protection





Standard equipment:

- 3-point linkage cat. II and III (for versions with 4 and 6 tines), cat. III (for versions with 8 tines)
- Adjustable tine spacing
- Clearance under the frame 90cm
- Tine type: Michel
- Shear bolt or spring protection
- 2 double rubber support wheels 175/70 R13 with mechanical working depth adjustment
- Working depth up to 45cm

Ref. No.	Working width [m]	Number of tines [pcs.]	Protection	Power demand [HP]	Weight[kg]	Price €
8280	3,0	4	Shear bolt	110-140	800	**10 318**
8281	3,0	6	Shear bolt	130-150	1050	**11 939**
8282	4,0	8	Shear bolt	140-170	1300	**16 875**
8283	3,0	4	Shear bolt	120-140	1350	**12 961**
8284	3,0	6	Shear bolt	130-160	1600	**15 771**
8285	4,0	8	Shear bolt	150-170	1900	**22 360**
8286	3,0	4	Double spring	120-140	1400	**17 206**
8287	3,0	6	Double spring	130-160	1650	**20 379**
8288	4,0	8	Double spring	150-170	1950	**28 540**

Optional equipment	3,0 [m]	Price €	4,0 [m]	Price €
2 rows of discs Ø 510 mm	8280+DRD510	6 013	8282+DRD510	**8 110**
Tubular roller Ø 500 mm	8280+TR500	3 242	8282+TR500	**6 347**
Packer roller Ø 500 mm	8280+PR500	4 428	8282+PR500	**7 970**
V ring roller Ø 500 mm with scrapers	8280+VR500	5 625	8282+VR500	**9 419**
FLEX roller Ø 500 mm	8280+FRS500	4 797	8282+FRS500	**8 246**
Rubber roller Ø 500 mm	8280+RR500	6 177	8282+RR500	**9 933**

Subsoiler suitable to be coupled with other machines





Standard equipment:

- 3-point linkage cat. III
- Working depth: up to 45 cm
- Frame with rear 3-linkage cat. II or III with hydraulic height adjustment for coupling subsoiler with other machines
- Clearance under the frame 90cm
- Tine type: Michel
- Shear bolt protection

Ref. No.	Working width [m]	Tines [pcs.]	Power demand [HP]	Weight [kg]	Price €
8289	3,0	4	130-150	950	11 297
8290	3,0	6	150-170	1100	12 794
8295	4,0	8	160-190	1350	16 044

Optional equipment	3,0 [m]	Price €	4,0 [m]	Price €
Supporting wheels 175/70/R13 2 pcs	8289+2SW	on request	x	
Supporting wheels 10.0 80/12 2 pcs.	x		8295+2SW	on request

Universal subsoiler with straight fixed tines



Standard equipment:

- 3-point linkage cat. II and III
- Working depth: 45cm
- Clearance under the frame: 79cm, tine spacing 75cm (subsoiler with 2 tines has space 150cm between tines)
- Tine thickness: 30mm with hardened front surface
- Tempered replecable points
- Drainage cone mounted to the tines with the chain
- Shear bolt protection
- Supporting foot

Ref. No.	Working width [m]	Number of tines [pcs.]	Power demand [HP]	Weight [kg]	Price €
8291	1,9	1	32	290	**2 125**
8292	2,3	2	64	375	**2 744**
8293	2,3	3	96	425	**3 098**
8294	3,0	4	128	500	**3 651**

Optional equipment	1,9 [m]	Price €	2,3 [m]	Price €	3,0 [m]	Price €
Row of harrow springs for 2 and 4 tines subsoiler	x		8292 +SLB	1240	8293 +SLB	**1483**
Supporting wheels 2 pcs	8291 +TSW	620	8291 +TSW	620	8291 +TSW	**620**

Universal subsoiler



Standard equipment:

- 3-point linkage cat. II and III
- Working depth: 65cm
- Ground clearance: 82cm, tine spacing 45cm
- Tine thickness: 40mm with hardened front surface
- Tempered replecable points
- Drainage cone mounted to the tines with the chain
- Shear bolt protection
- Supporting foot

Ref. No.	Working width [m]	Number of tines [pcs.]	Power demand [HP]	Weight [kg]	Price €
8296	0,9	3	102	695	**5 620**
8297	1,8	5	150	980	**7 523**
8298	2,7	7	250	1230	**9 957**
8299	3,6	9	350	1480	**12 170**

Optional equipment	0,9 [m]	Price €	1,8 [m]	Price €	2,7 [m]	Price €	3,6 [m]	Price €
Tandem spike tilling roller Ø 550 mm	8296 +TRT	4 426	8297+ TRT	5 311	8298+ TRT	6196	8299 +TRT	**8 187**

Subsoiler with bolt safety system

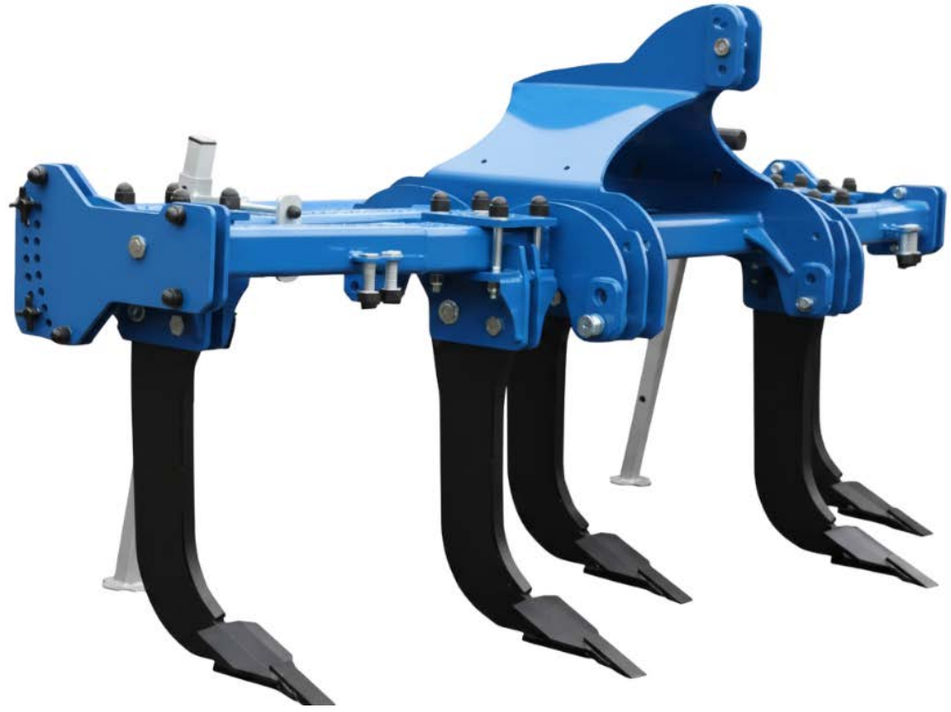

Standard equipment:

- 3-point linkage, cat. II / III
- Frame profile 140x100x8 mm
- Bolt safety system
- Adjustable tines
- Cearance under the frame 85cm
- Working depth up to 60 cm

Ref. No.	Frame width [m]	Roller width [m]	Transport width [m]	No. of tines [pcs.]	Safety system	Power demand [PS]	Weight [kg]	Price [€]
8250TT	2,95	3,175	3,38	3	Bolt	90-120	700	6 240
8251TT	2,95	3,175	3,38	4	Bolt	120-150	840	6 682
8252TT	3,00	3,175	3,38	5	Bolt	150-180	930	7 059

Optional equipment	8250TT	Price [€]	8251TT	Price [€]	8252TT	Price [€]
Front 3-point linkage, cat. II	8250TT+FRH	222	8251TT+FRH	222	8252TT+FRH	222
Tube roller Ø 510 mm	8250TT+TR510	1 107	8251TT+TR510	1 107	8252TT+TR510	1 107
Flat bar roller, smooth, Ø 440 mm	8250TT+FBR440	1 107	8251TT+FBR440	1 107	8252T+FBR440	1 107
Tandem spike roller, Ø 140 mm	8250TT+TANK140	2 434	8251TT+TANK140	2 434	8252TT+TANK140	2 434
Tandem spike roller, Ø 270 mm	8250TT+TANK270	2 877	8250TT+TANK270	2 877	8252TT+TANK270	2877
Hydraulic working depth adjustment on the roller	8250TT+HWDA	886	8250TT+HWDA	886	8252TT+HWDA	886
Support wheels 10.0/75-15.3	8250TT+SW	1 107	8251TT+SW	1 107	8252TT+SW	1 107
Supporting legs	8250TT+SL	625	8250TT+SL	625	8250TT+SL	625
LED lighting	8000+LED27	664	8000+LED27	664	8000+LED27	664

Subsoiler with spring safety system



Standard equipment:

- 3-point linkage, cat. II / III
- Frame profile 200x100x8 mm
- Spring safety system
- Adjustable tines
- Clearance under the frame 85cm
- Working depth up to 60 cm

Ref.No.	Frame width [m]	Roller width [m]	Transport width [m]	No. of tines [pcs.]	Safety system	Power demand [PS]	Weight [kg]	Price [€]
8253TT	2,90	3,175	3,38	3	Spring	90-120	1500	**13 276**
8254TT	3,00	3,175	3,38	4	Spring	120-150	1600	**14 161**
8255TT	2,90	3,175	3,38	5	Spring	150-180	1750	**15 488**
8256TT	3,00	3,175	3,38	6	Spring	150-200	1900	**17 258**

Optional equipment	8253TT	Price[€]	8254TT	Price[€]	8255TT	Price [€]	8256TT	Price[€]
Tandem spike roller, Ø 140 mm	8253TT+TANK140	**2 434**	8254TT+TANK140	**2 434**	8255TT+TANK140	**2 434**	8256TT+TANK140	**2 434**
Tandem spike roller, Ø 270 mm	8253TT+TANK270	**2 877**	8254TT+TANK270	**2 877**	8255TT+TANK270	**2 877**	8256TT+TANK270	**2 877**
Support wheels 185/65-15	8253TT+SW	**2 656**	8254TT+SW	**2 656**	8255TT+SW	**2 656**	8256TT+SW	**2 656**
Supporting legs	8000+LED27	**625**	8000+LED27	**625**	8000+LED27	**625**	8000+LED27	**625**
LED lighting	8000+LED27	**664**	8000+LED27	**664**	8000+LED27	**664**	8000+LED27	**664**

Chisel plow with bolt and hydraulic safety system



Standard equipment:

- 3-point linkage, cat. III
- Bolt or hydraulic safety system
- 2 rows of tines
- Hydraulic working depth adjustment
- Tandem spike roller 500 mm with hydraulic working depth adjustment

Ref. No.	Working width [m]	No. of tines [pcs.]	Power demand [HP]	Safety system	Weight [kg]	Price [€]
7200AH	2,5	5	160-200	Bolts	1900	15 618
7203AH	3,0	7	200-400	Bolts	2400	18 156
7200HAH	2,5	5	160-200	Hydraulic	1900	22 647
7203HAH	3,0	7	200-400	Hydraulic	2400	26 551

Optional equipment	Code	Preis [€]
Floating sides plates	7200AH+FSS	332
LED- ights	8000+LED28	586

Campbell roller for front





Standard equipment:

- 3-point linkage cat. II and III
- Supporting leg
- Swivel bearing sets
- Cleaning chains
- Campbell cast iron

	Ref. No.	Working width [m]	No. of rings [pcs.]	Power demand [HP]	Weight [kg]	Price €
Campbell ø700mm / 30°	9015ON	3,0 m	18	60	1020	9 198
	9016ON	3,4 m	22	70	1100	10 274
	9325ON	4,0 m	26	80	1250	13 279
Campbell ø700mm/45°	9019ON	3,0 m	18	60	1185	11 249
	9020ON	3,4 m	22	70	1325	12 751
	9326ON	4,0 m	26	80	1510	17 583

Optional equipment	3,0 m	Price €	3,4 m	Price €	4,0 m	Price €
Mechanical spring levelling board	9015ON+FSB	2 559	9016ON+FSB	2 843	9325ON+FSB	3 533
Hydraulic spring harrow	9015ON+SLB	3 005	9016ON+SLB	3 290	9325ON+SLB	3 980
Front/rear attachment	9512ON+FRH	894	9512ON+FRH	894	9512ON+FRH	894
LED Lights	8000+LED20	508	8000+LED20	508	8000+LED20	508

Campbell RX roller for front







Standard equipment:

- 3-point linkage, cat. II
- Cleaning chains for rings
- Campbell cast rings Ø 700 mm, working angle 30°
- Support feet

Ref.No.	Working width [m]	Power demand [HP]	Weight [kg]	Price [€]
9015RX	3,0	40	700	7 224

Optional equipment	3,0m	Price [€]
Front cultivator, two-row -tines 32x10	9015RX+2RT	1758
Hydraulic leveling spring tine harrow	9015RX+SLB	2148
LED lighting	8000+LED25	586

Cambridge roller for front and rear



Standard equipment:

- 3-point linkage cat. II
- Reinforced articulated frame with slide system
- Cast iron Cambridge Ø 500, 530, 600
- Swivel bearings
- Supporting foot

	Ref. No.	Working / Transport width [m]	Number of rings [pcs.]	Power demand [HP]	Weight [kg]	Price €
Cambridge Ø 500 mm	9005FA	3,0/3,2	51	60-70	1200	5 545
Cambridge Ø 530 mm	9008FA	3,0/3,2	51	60-70	1300	6 052
Cambridge Ø 600 mm	9102FA	3,0/3,2	51	65-75	1370	7 653

Optional equipment	Ref. No.	Price €
Hydraulic spring harrow	9005FA+FSB	3 339
LED Lights	8000+LED18	489

Campbell roller, hydraulic folding



Standard equipment:

- 3-point linkage cat. II and III
- Support leg
- 2 cylinders
- Swivel bearings
- Campbell cast iron
- Hydraulically foldable

	Ref. No.	Working width [m]	Number of rings [pcs.]	Power demand [HP]	Weight[kg]	Price €
Campbell ø700mm / 30°	9512ON	5,0 m	30	100	1980	15 797
	9510ON	6,0 m	38	130	2240	18 233
Campbell ø700mm/45°	9511ON	5,0 m	30	100	2140	19 289
	9513ON	6,0 m	38	130	2570	20 994

Optional equipment	5,0 [m]	Price€	6,0 [m]	Price€
Mechanical spring levelling board	9512ON+FSB	4 264	9510ON+FSB	5 158
Hydraulic spring harrow	9512ON+SLB	4 711	9512ON+SLB	5 604
Front/rear attachment	9512ON+FRH	894	9512ON+FRH	894
Cambridge cast Ø 530mm	9512ON+CA530	325	9510ON+CA530	On request
Cambridge cast Ø 600mm	9512ON+CA600	8 122	9510ON+CA600	9 787
LED Lights	8000+LED20	508	8000+LED20	508

3-section Cambridge roller, hydraulic folding





Standard equipment:

- Drawbar for top hitching Ø 45mm (height approx. 70 cm)
- Height-adjustable support leg (adjustment +-10cm)
- Wheels 10/75-15.3 10-12PR
- Transport safety lock (after lowering the working elements into the transport position)
- Sections secured by means of swivel-mounted bearing sets
- Ring axle Ø 60 mm for cast elements ø 500 and ø 530 mm (for cast elements ø 600 mm axle ø 65 mm)
- Transport width less than 3.0 m

	Ref. No.	Working width [m]	Power demand [HP]	Weight [kg]	Price €
Cambridge ø500 mm	9454FA	4,5	80-110	2240	13 081
	9455FA	5,3	85-115	2490	14 291
	9456FA	6,3	95-120	2810	15 462
	9461FA	7,5	120-140	3250	17 844
Cambridge ø530 mm	9457FA	4,5	80-110	2550	14 330
	9458FA	5,3	85-115	2790	15 150
	9459FA	6,3	95-120	3150	17 180
	9462FA	7,5	120-140	3670	20 148

Optional equipment	4,5 [m]	Price €	5,3 [m]	Price €
Hydraulic spring harrow	9454FA+FSB	5 115	9455FA+FSB	5 662
Stabilisation bar of spring harrow	9454FA+SBLB	625	9454FA+SBLB	625
Tire 400/60 15.5 14 PR	9454FA+TI400	1 432	9454FA+TI400	1 432
Pneumatic brake	9454FA+PB	2 382	9454FA+PB	2 382
Stone box	9454FA+SB	508	9454FA+SB	508
System for uniform arm pressure	9454FA+PC	2 246	9454FA+PC	2 246
LED Lights	8000+LED15	489	8000+LED15	489

Optional equipment	6,3 [m]	Price €	7,5 [m]	Price €
Hydraulic spring harrow	9456FA+FSB	6 209	9461FA+FSB	7 263
Stabilisation bar of spring harrow	9454FA+SBLB	625	9454FA+SBLB	625
Tire 400/60 15.5 14 PR	9454FA+TI400	1 432	9454FA+TI400	1 432
Pneumatic brake	9454FA+PB	2 382	9454FA+PB	2 382
Stone box	9454FA+SB	508	9454FA+SB	508
System for uniform arm pressure	9454FA+PC	2 246	9454FA+PC	2 246
LED Lights	8000+LED15	489	8000+LED15	489

3- or 5-section Cambridge roller, hydraulic folding





Standard equipment:

- Drawbar for top hitching Ø 40mm, (height approx. 70 cm)
- Height-adjustable support leg (adjustment +-10cm)
- Wheels 11.5/80-15.3
- Transport safety lock (after lowering the working elements into the transport position)
- Sections secured by means of swivel-mounted bearing sets
- Ring axle Ø 60 mm (for cast elements ø 600 mm axle ø 65 mm)
- Transport width less than 3.0 m
- 3 sections - 8m version
- 5 sections - version 9m and 12m

	Ref. No.	Working width [m]	Number of rings [pcs.]	Power demand [HP]	Weight [kg]	Price €
Cambridge ø 500 mm	9468ON	8,0	151	125	3550	24 771
	9469ON	9,0	167	140	4030	27 613
	9470ON	12,0	228	180	5300	38 171
Cambridge ø 530 mm	9471ON	8,0	157	125	3950	**25 989**
	9472ON	9,0	177	140	4520	**29 237**
	9473ON	12,0	237	190	5720	**38 577**
Cambridge ø 600 mm	9471OA	8,0	151	125	4370	32 892
	9472OA	9,0	177	140	4470	37 359
	9473OA	12,0	228	210	6500	48 729

Optional equipment	8,0 [m]	Price €	9,0 [m]	Price €	12,0 [m]	Price €
Hydraulic spring harrow	9468ON+FSB	**6 092**	9469ON+FSB	**7 716**	x	
Stabilisation bar of spring harrow	9468ON+SBLB	569	9469ON+SBLB	610	x	
Tire 400/60 15.5 14 PR	94549ON+TI400	1 056	94549ON+TI400	1 056	9454ON+TI400	1 056
Hydraulic brake	9454ON+HB	1 931	9454ON+HB	1 931	9454ON+HB	1 931
Pneumatic brake	9454ON+PB	2 832	9454ON+PB	2 832	9454ON+PB	2 832
Lower hitch fi 50 mm, rotating	945ON+LHP50	**407**	945ON+LHP50	**407**	945ON+LHP50	**407**
Hydraulic folding support foot	9454ON+HSF	894	9454ON+HSF	894	9454ON+HSF	894
Lower drawbar	9454ON+HCS	366	9454ON+HCS	366	9454ON+HCS	366
Stone box	9454ON+SB	305	9454ON+SB	305	9454ON+SB	305
LED Lights	8000+LED10	407	8000+LED10	407	8000+LED10	407



Single disc fertilizer spreader, mounted, metal tank



Standard equipment:

- 3-point linkage cat. II - pins
- Metal hopper 300-800kg
- Mechanical adjustment of spreading doze by using the lever
- Mechanical opening and closing of spreading slot
- Spreading disc made of INOX (diameter 560 mm, 4 INOX blades)
- Spreading disc rotation speed 540 rpm
- Spreading width 6-14m

Ref. No.	Capacity [kg]	Weight[kg]	Power demand [HP]	Price €
5233	300	46	30	487
5234	400	47	38	496
5235	500	50	47	505
5236	650	80	61	841
5237	800	85	61	930

Optional equipment	Ref. No.	Price€
Cover	5233+T	89
Hydraulic opening	5233+HO	222
Acid resistant disc	5233+AP	45
Filtering grid	5233+K	67
PTO shaft 210Nm/510 mm	WOM210/510	68
Road lights	8000+LED5	222

Single disc fertilizer spreaders, mounted, plastic tank



Standard equipment:

- 3-point linkage cat. I or II - pins
- Plastic hopper 200-650kg
- Mechanical adjustment of spreading doze by using the lever
- Mechanical opening and closing of the spreading slot
- Spreading disc made of INOX (diameter 560 mm, 4 INOX blades)
- Spreading disc rotation speed 540 rpm
- Spreading width 6-14m





Version T

- Towed version
- Drive from the wheels
- Wheels 13x5-6 (200-500 kg)
- Wheels 22-11-8 (650 kg)

Ref. No.	Capacity [kg]	Weight [kg]	Powerdemand [HP]	Price €
5229/ 5229T	200	42	25	470 / 886
5230/ 5230T	300	44	30	478 / 903
5231/ 5231T	400	46	38	487 / 912
5232/ 5232T	500	49	47	501 / 930
5236a/ 5236aT	650	81	61	620 / 1 527

Optional equipment	Ref. No.	Price €
Top Cover	5229+T	89
Hydraulic opening	5229+HO	222
Acid resistant disc	5229+AP	45
Side cover for sand spreading	5229+UST	133
Top limiter for sand spreading	5229+SST	89
Orchard spreading attachment	5232+OA	261
Filtering grid	5229+K	67
PTO shaft 210Nm/510 mm	WOM210/510	68
Wheels 22x11-8 for 200-500kg	5229+WH22	460
LED road lights	8000+LED5	222

Single disc mineral fertilizer spreader for orchard RX, plastic tank



Standard equipment:

- 3-point linkage cat. II - pins
- Plastic hopper 200-500l
- Mechanical adjustment of spreading doze by using of 2 levers
- Spreading discs made of INOX 6 blades
- Spreading width 4-12m
- Spreading disk rotation speed 540 rpm
- Vineyard and orchard equipment for spreading right/left

Ref. No.	Capacity [l]	Power demand [HP]	Weight [kg]	Price €
5229sRX	200	21	65	532
5230sRX	300	21	65	532
5230asRX	350	21	73	558
5231sRX	400	21	73	558
5232sRX	500	21	76	558

Optional equipment	Ref. No.	Price €
Filtering grid	5229sRX+K	53
Hydraulic opening	5220RX+HO	79
PTO shaft 210Nm/510 mm	WOM210/510	68
LED lights	8000+LED19	On request

Two discs fertilizer spreader RX, metal tank





Standard equipment:

- 3-point linkage cat. II - pins
- Metal hopper 400-1600l
- Mechanical adjustment of spreading doze by using of 2 levers
- 2 INOX discs
- Hydraulic opening
- Spreading width 12-24m
- Tarpaulin

Ref. No.	Capacity [kg]	Power demand [HP]	Weight [kg]	Price €
5237RX	400	55	170	1 800
5238RX	600	55	190	1 987
5239RX	800	55	201	2 081
5240RX	1000	55	231	2 175
5243RX	1200	55	236	2 268
5244RX	1400	55	267	2 362
5245RX	1600	55	298	2 549

Optional equipment	Réf.	Prix€
PTO shaft 210Nm/510 mm	WOM210/510	68

Two disc fertilizer spreader, mounted, metal tank



Standard equipment:

- 3-point linkage cat. II - pins
- Metal hopper 600-1000kg
- 2 INOX spreading discs (2x2 stainless steel wings)
- Mechanical adjustment of fertilizing dose by using the lever
- Hydraulic opening and closing of spreading slot
- Spreading width 10-21m
- Spreading disc rotation speed 540 rpm

Ref. No.	Capacity [kg]	Power demand [HP]	Weight [kg]	Price€
5238	600	45	210	2 744
5239	800	50	240	2 833
5240	1000	55	260	2 921

Two disc fertilizer spreader, mounted, XL



Standard equipment:

- 3-point linkage cat. II - pins
- Metal hooper powder painted 800-2000 kg
- 2 INOX discs (2x2 stainless steel wings)
- Mechanical adjustment of fertilizing dose by using the lever
- Hydraulic opening and closing of spreading slot
- Spreading width 10-24m
- Spreading disc rotation speed 540 rpm
- All screw connections made of acid resistant steel
- Viewer for material level control

Ref. No.	Capacity [kg]	Power demand [HP]	Weight [kg]	Price€
5242	800	50	234	4 249
5243	1200	60	258	4 514
5244	1500	65	276	4 824
5245	2000	75	306	5 222

Optional equipment	5238	Price€	5239	Price€	5240	Price€	5242	Price€	5243	Price€	5244	Price€	5245	Price€
Acid resistant tank 600	5238+APT	886	5239+APT	1 107	5240+APT	1 372	5242+APT	1 195	5243+APT	1 726	5244+APT	2 169	5245+APT	2 788
PTO shaft 355Nm/710 mm	WOM355/710	157	WOM355/710	157	WOM355/710	157	WOM355/710	157	WOM355/710	157	WOM355/710	157	WOM355/710	157
Cover	5238+T	155	5238+T	155	5238+T	155	5242+T	155	5242+T	155	5242+T	155	5242+T	155
Cover with foldable frame	5238+TF	266	5238+TF	266	5238+TF	266	5242+TF	310	5242+TF	310	5242+TF	310	5242+TF	310
Attachment for border spreading	5238+UST	266	5238+UST	266	5238+UST	266	5242+UST	266	5242+UST	266	5242+UST	266	5242+UST	266
Hydraulic spreading limiter	x	x	x	x	x	x	5242+HSL	1 549	5242+HSL	1 549	5242+HSL	1 549	5242+HSL	1 549
LED road lights	8000+LED5	222	8000+LED5	222	8000+LED5	222	8000+LED5	222	8000+LED5	222	8000+LED5	222	8000+LED5	222

Field sprayers, mounted









Standard equipment:

- 3-point linkage cat. II - pins
- Polyethylen tank
- Chemical diluent in the tank inlet in the filter mesh (mixing by a liquid stream from the bottom of the tank)
- Triple filtration system; inlet mesh, suction filter and discharge filter
- Clean water tank for hands washing, capacity 15l
- Single nozzle holders with cut-off valves
- P 100 pump (Polish production) with capacity 100l/min for boom till 12m
- UDOR ZETA 100 pump with capacity 100l/min for 15m boom
- UDOR ZETA 140 pump with capacity 100l/min for 18m boom
- Valve with manual adjustment: work-overflow; pressure regulation and closing of each section
- Boom 6m, 8m, 10m, 12m or 15m width with mechanical folding and raising
- Boom 18m with mechanical folding and hydraulic raising
- Mechanical stabilizer of booms 15m and 18m

Ref. No.	Capacity [L]	Boomwidth [m]	Weight [kg]	Price €
OP300	300	-		1 422
OP306	300	6	130	1 510
OP308	300	8	140	1 536
OP310	300	10	150	1 682
OP400	400	6		1 466
OP410	400	10	160	1 726
OP412	400	12	170	1 771
OP410HQ	400	10		2 479
OP412HQ	400	12		2 523
OP600	600	-		2 041
OP610	600	10	175	2 302
OP612	600	12	185	2 346
OP615	600	15	290	3 585
OP610HQ	600	10		3 142
OP612HQ	600	12		3 187
OP615HQ	600	15		4 426
OP618H	600	18	300	5 089
OP618HHQ	600	18		5 930
OP800	800	-		2 218
OP810	800	10	280	2 479
OP812	800	12	290	2 523
OP815	800	15	310	3 806
OP810HQ	800	10		3 452
OP812HQ	800	12		3 496
OP815HQ	800	15		4 780
OP818H	800	18	330	5 311
OP818HHQ	800	18		6 284
OP1000	1000	-		2 395
OP1012	1000	12	300	2 700
OP1015	1000	15	320	4 027
OP1012HQ	1000	12		3 762
OP1015HQ	1000	15		5 089
OP1018H	1000	18	385	5 532
OP1018HHQ	1000	18		6 594
OP1212	1200	12	320	3 718
OP1215	1200	15	335	5 045
OP1212HQ	1200	12		4 780
OP1215HQ	1200	15		6 107
OP1218H	1200	18	400	6 550
OP1218HHQ	1200	18		7 612



Field sprayers, mounted

Optional equipment	6,0 [m]	Price €	8,0 [m]	Price €	10,0 [m]	Price €
PTO shaft 210Nm/510 mm	WOM210/510	68	WOM210/510	68	WOM210/510	68
Tank for washing spraying circuit	OP306+FT	222	OP306+FT	222	OP306+FT	222
Lateral chemical induction hopper	OP306+SR	797	OP306+SR	797	OP306+SR	797
Lateral chemical induction hopper ARAG	OP306+ASR	1 328	OP306+ASR	1 328	OP306+ASR	1 328
Tripple nozes, Polish product, boom 6m	OP306+TN	110	OP308+TN	141	OP310+TN	200
Tripple nozes ARAG, boom 6m	OP306+TNA	495	OP308+TNA	547	OP310+TNA	532
Aditional tank of 1200L for the front of the tractor	OP306+TE	2 877	OP306+TE	2 877	OP306+TE	2 877
Tank cleaning nozzle	OP306+TCN	266	OP306+TCN	266	OP306+TCN	266
Injection nozzle IDK (for pcs)	OP306+NIDK	9	OP306+NIDK	9	OP306+NIDK	9
Constant pressure ARAG 5 sections (standard in trailed sprayers)	OP306+SA	664	OP306+SA	664	OP306+SA	664
Constant pressure ARAG 5 sections with control from the tractor cabine (ON OFF pressure adjustment)	OP306+SAE2	1 151	OP306+SAE2	1 151	OP306+SAE2	1 151
Constant pressure ARAG 5 sections with control from the tractor cabine electric (full control)	OP306+SAE3	2 213	OP306+SAE3	2 213	OP306+SAE3	2 213
Pump 70L/min (max for 12m boom) UDOR	OP306+UD70	396	OP306+UD70	396	OP306+UD70	396
Pump 100l/min (standard for boom 15m) UDOR	OP306+UD100	355	OP306+UD100	355	OP306+UD100	355
Pump 140l/min (standard for boom 18m) UDOR	OP306+UD140	664	OP306+UD140	664	OP306+UD140	664
Pump 170l/min UDOR	OP306+UD170	974	OP306+UD170	974	OP306+UD170	974
Hydraulic boom raising (standard for boom 18m)	OP306+HBL	664	OP306+HBL	664	OP306+HBL	664
Mechanical stabilizer of boom 12m (standard for boom 15m and 18m)	OP306+MBS	178	OP306+MBS	178	OP306+MBS	178
Hydraulic stabilizer for ramps from 12m with hydraulic lift (cross-folding version requires double hydr outlet)	x		x		x	
Hydraulic blockage of the stabilizer	OP412+HSB	532	OP412+HSB	532	OP412+HSB	532
Hydraulic boom in „X" system 12m, 15m, 18m with hydraulic unfolding and raising (mechanical stabiliser in standard)	OP412+XHU	3 762	OP412+XHU	3 762	OP412+XHU	3 762
Hydraulic divider	OP306+HD	443	OP306+HD	443	OP306+HD	443
Electric steering of the boom hydraulics from the tractor cabin	OP306+HDE	1 594	OP306+HDE	1 594	OP306+HDE	1 594

Field sprayers, mounted

Optional equipment	6,0 [m]	Price €	8,0 [m]	Price €	10,0 [m]	Price €
Longer pipes	OP306+LS	42	OP306+LS	42	OP306+LS	42
100 manometer	OP306+P100	89	OP306+P100	89	OP306+P100	89
Galvanization of frame and boom	OP306+G	235	OP306+G	235	OP306+G	235
Galvanisation de cadre et rampe repliable en croix	x		x		x	
Hand lance + 25m of hose + reel	OP306+HL	244	OP306+HL	244	OP306+HL	244
BRAVO 180S computer	OP306+18S	5 311	OP306+18S	5 311	OP306+18S	5 311
BRAVO 180S computer with hydraulics	OP306+18SH	7 346	OP306+18SH	7 346	OP306+18SH	7 346
BRAVO 300S computer	OP306+30S	6 151	OP306+30S	6 151	OP306+30S	6 151
BRAVO 300S computer with hydraulics	OP306+30SH	8 541	OP306+30SH	8 541	OP306+30SH	8 541
Speed sensor GPS for computer	OP306+GSS	1 018	OP306+GSS	1 018	OP306+GSS	1 018
Foam marker for sprayers with X boom	OP306+FS	1 240	OP306+FS	1 240	OP306+FS	1 240
Hydrant filling connection	OP306+FTC	355	OP306+FTC	355	OP306+FTC	355
LED road lights	8000+LED5	222	8000+LED5	222	8000+LED5	222

Optional equipment	12,0 [m]	Price €	15,0 [m]	Price €	18,0 [m]	Price €
PTO shaft 210Nm/510 mm	WOM210/510	68	WOM210/510	68	WOM210/510	68
Tank for washing spraying circuit	OP306+FT	222	OP306+FT	222	OP306+FT	222
Lateral chemical induction hopper	OP306+SR	797	OP306+SR	797	OP306+SR	797
Lateral chemical induction hopper ARAG	OP306+ASR	1 328	OP306+ASR	1 328	OP306+ASR	1 328
Tripple nozes, Polish product, boom 6m	OP412+TN	222	OP615+TN	244	OP618+TN	266
Tripple nozes ARAG, boom 6m	OP412+TNA	576	OP615+TNA	753	OP618+TNA	886
Aditional tank of 1200L for the front of the tractor	OP306+TE	2 877	OP306+TE	2 877	OP306+TE	2 877
Tank cleaning nozzle	OP306+TCN	266	OP306+TCN	266	OP306+TCN	266
Injection nozzle IDK (for pcs)	OP306+NIDK	9	OP306+NIDK	9	OP306+NIDK	9
Constant pressure ARAG 5 sections (standard in trailed sprayers)	OP306+SA	664	OP306+SA	664	OP306+SA	664
Constant pressure ARAG 5 sections with control from the tractor cabine (ON OFF pressure adjustment)	OP306+SAE2	1 151	OP306+SAE2	1 151	OP306+SAE2	1 151
Constant pressure ARAG 5 sections with control from the tractor cabine electric (full control)	OP306+SAE3	2 213	OP306+SAE3	2 213	OP306+SAE3	2 213

Optional equipment	12,0 [m]	Price €	15,0 [m]	Price €	18,0 [m]	Price €
Pump 70L/min (max for 12m boom) UDOR	OP306+UD70	396	OP306+UD70	396	OP306+UD70	396
Pump 100l/min (standard for boom 15m) UDOR	OP306+UD100	355	OP306+UD100	355	OP306+UD100	355
Pump 140l/min (standard for boom 18m) UDOR	OP306+UD140	664	OP306+UD140	664	OP306+UD140	664
Pump 170l/min UDOR	OP306+UD170	974	OP306+UD170	974	OP306+UD170	974
Hydraulic boom raising (standard for boom 18m)	OP306+HBL	664	OP306+HBL	664	STANDARD	
Mechanical stabilizer of boom 12m (standard for boom 15m and 18m)	OP306+MBS	178	STANDARD		STANDARD	
Hydraulic boom stabilizer	OP412+HBS	1 417	OP412+HBS	1 417	OP412+HBS	1 417
Hydraulic blockage of the stabilizer	OP412+HSB	532	OP412+HSB	532	OP412+HSB	532
Hydraulic boom in „X" system 12m, 15m, 18m with hydraulic unfolding and raising (mechanical stabiliser in standard)	OP412+XHU	3 762	OP412+XHU	3 762	OP412+XHU	3 762
Hydraulic divider	OP306+HD	443	OP306+HD	443	OP306+HD	443
Electric steering of the boom hydraulics from the tractor cabin	OP306+HDE	1 594	OP306+HDE	1 594	OP306+HDE	1 594
Longer pipes	OP306+LS	42	OP306+LS	42	OP306+LS	42
100 manometer	OP306+P100	89	OP306+P100	89	OP306+P100	89
Galvanization of frame and boom	OP612+G	287	OP615+G	521	OP1215+G	599
Galvanization of frame and boom	OP612HX+G	755	OP615HX+G	859	OP618HX+G	1 042
Hand lance + 25m of hose + reel	OP306+HL	244	OP306+HL	244	OP306+HL	244
BRAVO 180S computer	OP306+18S	5 311	OP306+18S	5 311	OP306+18S	5 311
BRAVO 180S computer with hydraulics	OP306+18SH	7 346	OP306+18SH	7 346	OP306+18SH	7 346
BRAVO 300S computer	OP306+30S	6 151	OP306+30S	6 151	OP306+30S	6 151
BRAVO 300S computer with hydraulics	OP306+30SH	8 541	OP306+30SH	8 541	OP306+30SH	8 541
Speed sensor GPS for computer	OP306+GSS	1 018	OP306+GSS	1 018	OP306+GSS	1 018
Foam marker for sprayers with X boom	OP306+FS	1 240	OP306+FS	1 240	OP306+FS	1 240
Hydrant filling connection	OP306+FTC	355	OP306+FTC	355	OP306+FTC	355
LED road lights	8000+LED5	222	8000+LED5	222	8000+LED5	222

Front tank 1200l







Standard equipment:

- 3-point hitch, cat. II
- Liquid system rinsing tank and hand wash tank
- Mixing tank
- Warning signs with LED lighting

Ref.no.	Capacity [L]	Net weight [kg]	Dimensions [cm]	Transport width [cm]	Price €
ZOP1200	1200	140	180x150x110	180	2 877

Optional equipment	Ref. no.	Price €
UDOR pump with hydraulic motor	ZOP1200+TEH	1 549
Gauge wheels	ZOP1200+SW	266

Trailed sprayers with mechanical boom unfolding



Standard equipment:

- Rigid drawbar for lower hitch with a rotating tip ø 40mmm
- Polyethylen tank
- Triple filtration system
- Clean water tank for hands washing - capacity 15l, for 2000l sprayer - 25l tank
- Chemical diluent in the tank inlet in the filtering mesh (mixing by a liquid stream from the bottom of the tank) - 35l capacity
- UDOR pump
- ARAG 5-sections manual constant pressure valve
- Single nozzle heads with cut-off valves
- Mechanical boom unfolding
- Hydraulic boom raising
- Mechanical boom stabilizer
- Supporting leg

Ref. No.	Capacity [L]	Boom width [m]	Pump capacity [l/min]	Wheels	Weight [kg]	Price €
OPC1012HQ	1000	12	140	7,5x20	-	10 090
OPC1015HQ	1000	15	140	7,5x20	-	11 240
OPC1018HQ	1000	18	140	7,5x20	-	12 432
OPC1212	1200	12	100	7,5x20	750	8 585
OPC1215	1200	15	140	7,5x20	760	9 824
OPC1218	1200	18	140	7,5x20	835	11 063
OPC1512HQ	1500	12	140	9,5x24	-	13 807
OPC1515HQ	1500	15	140	9,5x24	-	15 002
OPC1518HQ	1500	18	170	9,5x24	-	16 418
OPC1521HQ	1500	21	170	9,5x24	-	16 683
OPC1612	1600	12	140	9,5x24	790	11 904
OPC1615	1600	15	140	9,5x24	800	13 143
OPC1618	1600	18	170	9,5x24	875	14 471
OPC1621	1600	21	170	9,5x24	925	14 825
OPC2015	2000	15	170	9,5x32	855	15 134
OPC2015HQ	2000	15	170	9,5x32	-	17 568
OPC2018	2000	18	170	9,5x32	930	16 152
OPC2018HQ	2000	18	170	9,5x32	-	18 630
OPC2021	2000	21	170	9,5x32	1050	16 595
OPC2021HQ	2000	21	170	9,5x32	-	18 896
OPC2515	2500	15	170	9,5x32	1600	16 904
OPC2515HQ	2500	15	170	9,5x32	-	19 294
OPC2518	2500	18	170	9,5x32	1650	17 966
OPC2518HQ	2500	18	170	9,5x32	-	20 444
OPC2521	2500	21	200	9,5x32	-	18 674
OPC2521HQ	2500	21	200	9,5x32	1700	21 108









Trailed sprayers with mechanical boom unfolding

Optional equipment	12,0 [m]	Price€	15,0 [m]	Price€	18,0 [m]	Price€	21,0 [m]	Price€
PTO shaft 210Nm/510 mm	WOM355/710	157	WOM355/710	157	WOM355/710	157	WOM355/710	157
Tripple nozes	OPC1212+TN	222	OPC1215+TN	244	OPC1218+TN	266	OPC1621+TN	288
ARAG tripple nozes for boom 12m	OPC1212+TNA	576	OPC1215+TNA	753	OPC1218+TNA	886	OPC1621+TNA	1 018
Drawbar with swivel hitch cross shaft cat. II	OPC1212+HCS	794	OPC1212+HCS	794	OPC1212+HCS	794	OPC1212+HCS	794
Injection nozzle IDK (for pcs)	OPC1212+IDK	9	OPC1212+IDK	9	OPC1212+IDK	9	OPC1212+IDK	9
Side chemical induction hopper	OPC1212+SR	797	OPC1212+SR	797	OPC1212+SR	797	OPC1212+SR	797
Side chemical induction hopper ARAG	OPC1212+ASR	1 328	OPC1212+ASR	1 328	OPC1212+ASR	1 328	OPC1212+ASR	1 328
Tank for cleaning spraying circuit	OPC1212+FR	222	OPC1212+FR	222	OPC1212+FR	222	OPC1212+FR	222
Hydraulic unfloding of boom alonside the tank	OPC1212+PHU	5 532	OPC1212+PHU	5 532	OPC1212+PHU	5 532	OPC1212+PHU	5 532
Hydraulic unfloding of the boom in X type	OPC1212+XHU	3 541	OPC1212+XHU	3 541	OPC1212+XHU	3 541	STANDARD	
Hydraulic boom stabilizer	OPC1212+HBS	1 417	OPC1212+HBS	1 417	OPC1212+HBS	1 417	OPC1212+HBS	1 417
Hydraulic blockage of the boom stabilizer	OPC1212+HSB	532	OPC1212+HSB	532	OPC1212+HSB	532	OPC1212+HSB	532
Wheels 9,5x24 (insted of 7,5x20)	OPC1212+CWU	576	OPC1212+CWU	576	OPC1212+CWU	576	OPC1212+CWU	576
ARAG control valve 5 sections manual + electric control (ON OFF)	OPC1212+SA1E	532	OPC1212+SA1E	532	OPC1212+SA1E	532	OPC1212+SA1E	532
ARAG control valve 5 sections manual + electric control (ON OFF) pressure adjustment	OPC1212+SA2E	620	OPC1212+SA2E	620	OPC1212+SA2E	620	OPC1212+SA2E	620
ARAG control valve 5 sections electric	OPC1212+SA3E	1 682	OPC1212+SA3E	1 682	OPC1212+SA3E	1 682	OPC1212+SA3E	1 682
Hydraulic divider	OPC1212+HD	443	OPC1212+HD	443	OPC1212+HD	443	OPC1212+HD	443
Electric steering of the boom hydraulics form the tractor cabin	OPC1212+HDE	1594	OPC1212+HDE	1594	OPC1212+HDE	1594	OPC1212+HDE	1594
BRAVO 180S computer	OP306+18S	5 311	OP306+18S	5 311	OP306+18S	5 311	OP306+18S	5 311
BRAVO 180S computer with hydraulics	OP306+18SH	7 346	OP306+18SH	7 346	OP306+18SH	7 346	OP306+18SH	7 346
BRAVO 300S computer	OP306+30S	6 151	OP306+30S	6 151	OP306+30S	6 151	OP306+30S	6 151
BRAVO 300S computer with hydraulics	OP306+30SH	8 541	OP306+30SH	8 541	OP306+30SH	8 541	OP306+30SH	8 541
Speed sensor GPS for computer	OP306+GSS	1 018	OP306+GSS	1 018	OP306+GSS	1 018	OP306+GSS	1 018
Foam marker for sprayers with X boom	OP306+FST	1 240	OP306+FST	1 240	OP306+FST	1 240	OP306+FST	1 240
Frame and boom galvanization	OPC1212+G	-	OPC1215+G	-	OPC1218+G	-	OPC1621+G	-
Tank cleaning nozzle	OPC1212+TCN	266	OPC1212+TCN	251	OPC1212+TCN	251	OPC1212+TCN	251
Hand lance + 25m of hose + reel	OPC1212+HL	244	OPC1212+HL	244	OPC1212+HL	244	OPC1212+HL	244
In line filter for each section	OPC1212+LF	31	OPC1212+LF	30	OPC1212+LF	30	OPC1212+LF	30
Hydrant filling connection	OP306+FTC	355	OP306+FTC	355	OP306+FTC	355	OP306+FTC	355
LED road lights	8000+LED6	266	8000+LED6	266	8000+LED6	266	8000+LED6	266

Trailed sprayers, with hydraulic boom unfolding





Standard equipment:

- Rigid drawbar for lower hitch with a rotating tip ø 40mm
- Supporting leg
- Hydraulic boom raising and folding (trapezoidal boom)
- One-sided, independent boom raising
- Hydraulic boom stabilizer
- Hydraulic boom stabilization lock
- Tank for hands washing and the liquid system cleaning
- Lateral chemical induction hopper
- UDOR pump
- Electric hydraulic control
- Electric steering of the liquid system
- Road lights







Ref. No.	Capacity [L]	Boom width [m]	Pump capacity /min]	Wheels	Price €
OPC2018H	2000	18	170	9,5 x 32	**30 622**
OPC2018HHQ	2000	18	170	9,5 x 32	**32 658**
OPC2021H	2000	21	200	9,5 x 32	**31 994**
OPC2021HHQ	2000	21	200	9,5 x 32	**34 162**
OPC2024H	2000	24	260	9,5 x 32	**33 543**
OPC2024HHQ	2000	24	260	9,5 x 32	**35 534**
OPC2518H	2500	18	170	9,5 x 36	**32 702**
OPC2518HHQ	2500	18	170	9,5 x 36	**34 915**
OPC2521H	2500	21	200	9,5 x 36	**34 207**
OPC2521HHQ	2500	21	200	9,5 x 36	**36 331**
OPC2524H	2500	24	260	9,5 x 36	**35 578**
OPC2524HHQ	2500	24	260	9,5 x 36	**37 702**
OPC3018H	3000	18	200	11,2 x 42	**37 039**
OPC3018HHQ	3000	18	200	11,2 x 42	**40 977**
OPC3021H	3000	21	200	11,2 x 42	**37 702**
OPC3021HHQ	3000	21	200	11,2 x 42	**41 685**
OPC3024H	3000	24	260	11,2 x 42	**39 118**
OPC3024HHQ	3000	24	260	11,2 x 42	**43 189**
OPC4018H	4000	18	200	11,2 x 42	**40 623**
OPC4018HHQ	4000	18	200	11,2 x 42	**44 606**
OPC4021H	4000	21	260	11,2 x 42	**42 039**
OPC4021HHQ	4000	21	260	11,2 x 42	**46 066**
OPC4024H	4000	24	260	11,2 x 42	**42 703**
OPC4024HHQ	4000	24	260	11,2 x 42	**46 774**

Optional equipment	18,0 [m]	Price €	21,0 [m]	Price €	24,0 [m]	Price €
PTO shaft 355Nm/710 mm	WOM355/710	157	WOM355/710	157	WOM355/710	**157**
4 position nozes ARAG	OPC2018+TNA	886	OPC2021+TNA	1 018	OPC2024+TNA	**1 151**
Drawbar with hitch shaft cat. II boom (for 200l and 2500l) torsional hitch	OPC2018+HCS	841	OPC2018+HCS	841	OPC2018+HCS	**841**
Side chemical induction hopper ARAG	OPC2018+ASR	532	OPC2018+ASR	532	OPC2018+ASR	**532**
BRAVO 180S computer	OP306+18S	5 311	OP306+18S	5 311	OP306+18S	**5 311**
BRAVO 300S computer	OP306+30S	6 151	OP306+30S	6 151	OP306+30S	**6 151**
BRAVO 400S computer with GPS	OPC2018+40S	10 045	OPC2018+40S	10 045	OPC2018+40S	**10 045**
Foam marker for sprayers with X boom	OP306+FST	1 240	OP306+FST	1 240	OP306+FST	**1 240**
Tank cleaning nozzle	OPC2018+TCN	266	OPC2018+TCN	266	OPC2018+TCN	**266**
Pneumatic braking system	OPC2018+PB	2 567	OPC2018+PB	2 567	OPC2018+PB	**2 567**
Hydrant filling connection	OP306+FTC	355	OP306+FTC	355	OP306+FTC	355

1 row potato planter





Standard equipment:

- 3-point linkage cat. I N
- Planting distance between the potatoes in the same row 29 cm /32 cm /35 cm
- Planting depth from 10 to 15cm
- Metal wheels
- 2 ridging shares

Ref. No.	Space between the ridgers [cm]	Capacity [kg]	Power demand [HP]	Weight [kg]	Price €
3052	62,5 / 72,5	90	20	130	1 040

Optional equipment	Ref. No.	Price €
Rubber protection of hopper bottom	3052+RTP	40
Insert for small potatoes (20pc.)	3052+ISP	195
Rubber wheels	3052+RW	355

2 rows potato planter





Standard equipment:

- 3-point hitch cat. I and II - pins
- Tank capacity 180 kg or 300kg
- Distance between the potatoes in the same row 29cm /32cm /35cm
- Planting depth from 10 to 15cm
- Metal wheels
- 3 ridging shares

Ref. No.	Space between the ridaers [cm]	Capcity [kg]	Power demand [HP]	Weight [kg]	Price €
3050	62,5/ 67,5	180	38	210	1 726
3051	70/75	300	43	220	1 903

Optional equipment	Ref. No.	Price €
Rubber protection of hopper bottom (2 pcs.)	3050+RTP	80
Insert for small potatoes (40pcs.)	3050+ISP	390
Fertilizer distributor for potato planter	3050+FS	204
Rubber wheels (2pcs) instead of metal wheel (extra charge)	3050+RW	355

Hoe ridger



Standard equipment:

- 3-point linkage cat. I and II, pins
- Adjustable inter-row width in the range of 62,5 to 75,0cm
- Metal support wheels
- Coulter and duck-foot coulter
- Ridging component - wing share
- Working depth: 7-10cm

Ref. No.	Working width [m]	No. of working sections [pcs .]	Space between rows [mm]	Power demand [HP]	Weight [kg]	Price €
3095	1,7	3	625-750	30	105	850
3096	3,1	5	625-750	48	175	1 399

Ridger with ridges shaping attachment



Standard equipment:

- 3-point linkage cat. I and II - pins
- First beam - cultivator tines 32×10 with straight double coulter
- Second beam tines with double heart coulter and ridging hoe
- An attachment shaping of the ridges and reducing working depth of the teeth
- Working depth: 15 cm

	Ref. No.	No. of working sections [pcs.]	Power demand [HP]	Weight [kg]	Price €
Version with the ridging plates	3099a	625-750	48	420	2 877
	3098a	625-750	78	790	5 709
Version with short ridging plates	3099	625-750	38	285	4 868
	3098	625-750	60	570	9 293
Version with long ridging plates	3099b	625-750	38	285	5 820
	3098b	625-750	60	570	11 063

Optional equipment	Ref No.	Price €
Side screens	3099+FSS	642

1 row vibration potato digger with side discharge



Standard equipment:

- 3-point linkage cat. I and II
- Blade width 44cm
- Ridge width 56cm
- Working depth 20cm
- Metal supporting wheels
- Side discs

Ref. No.	Dimensions (L./W./ H.) [m]	Power demand [HP]	Weight [kg]	Price €
3001	1,5 / 1,7 / 1,15	10	245	2 545

Optional equipment	Ref. No.	Price €
PTO shaft 270Nm, 510 mm	WOM270/510	76

1 row vibration potato digger with rear discharge



Standard equipment:

- 3-point linkage cat. I
- Ridge width 56 cm
- Working depth 20cm
- •Metal supporting wheels

Ref. No.	Power demand [HP]	Weight [kg]	Price €
3001a	10	135	1 638

Optional equipment	Ref. No.	Price €
PTO shaft 270Nm, 510 mm	WOM270/510	76

1 row potato diggers with conveyor belt



Standard equipment:

- 3-point linkage cat. I and II
- Blade width 40cm
- Rubber wheels (400x8.0)
- Supporting leg
- Inner drive shaft with shear bolt protection
- Single sifting tape with rubber cover
- Chute grate

Ref. No.	Dimensions (L./W./ H.) [m]	Power demand [HP]	Weight[kg]	Price €
3004	2,35/ 90/ 1,35	25	235	2 226

Optional equipment	Ref. No.	Price €
PTO shaft 270Nm, 510 mm	WOM270/510	76
Mechanical displacement 3 point linkage	3004+MDH	183

2 row conveyor digger



Standard equipment:

- 3-point linkage cat. II and III
- Single or double sifting tape with rubber cover
- Rubber wheels
- Internal drive shaft with bolt protection
- Disc coulter
- Chute grates
- Working width 62.5-67.5 or 70-75 cm

Ref. No	No. of screen tapes [pcs.]	Space between the ridges [mm]	Power demand [HP]	Working width [m]	Weight [kg]	Price €
3005	1	62,5-67,5	50	1,65	650	8 718
3006	1	70,0-75,0	55	1,85	690	9 736
3007	2	62,5-67,5	50	1,65	800	10 975
3008	2	70,0-75,0	55	1,85	860	11 727

Optional equipment	Ref. No.	Price €
PTO shaft 270Nm, 510 mm	WOM270/510	76

Rotovator with hydraulic displacement



Standard equipment:

- 3-point linkage cat. II coupling pins
- Side hydraulic displacement up to 56cm
- Skids for working depth adjustment
- Rotation speed of knife shaft 265 rpm
- Rear guard to adjust intensity of soil crushing
- Main transmission: angel gear and side: chain transmission
- Reductor (540/265 rpm)
- PTO shaft with overload clutch
- Working depth up to 12 cm

Ref. No.	Working width [m]	No. of rotors/ knives [pcs.]	Power demand [HP]	Weight [kg]	Price €
3100A	1,4	6/36	41	440	4 426
3101A	1,6	7/42	48	460	4 735
3102A	1,8	8/48	61	500	5 045
3103A	2,0	9/54	75	525	5 355

Optional equipment	Ref. No.	Price €
Copying wheel 2pcs	3100b+CW	399

Rotovator



Standard equipment:

- 3-point linkage cat. II coupling pins
- Skids for working depth adjustment
- Rear guard to adjust intensity of soil crushing
- Shaft speed 265 rpm
- Main transmission: angel gear, side gear: chain transmission
- Reductor (540/265 rpm)
- PTO shaft with overload clutch
- Working depth up to 12 cm

Ref. No.	Working width [m]	No. of rotors/ knives [pcs..]	Power demand [HP]	Weight [kg]	Price €
3104B	1,2	5/30	34	320	3 187
3100B	1,4	6/36	41	345	3 408
3101B	1,6	7/42	48	370	3 629
3102B	1,8	8/48	61	390	3 850
3103B	2,0	9/54	75	420	4 072

Optional equipment	1,2 [m]	Price €	1,4 [m]	Price €
Roller	3104b+CR	1 063	3100b+CR	1 173
Copying wheel 2pcs	3100b+CW	399	3100b+CW	399

Optional equipment	1,6 [m]	Price €	1,8 [m]	Price €	2,0 [m]	Price €
Roller	3101b+CR	1 306	3102b+CR	1 417	3103b+CR	1 549
Copying wheel 2pcs	3100b+CW	399	3100b+CW	413	3100b+CW	399

Receiving basket



Standard equipment:

- Charging hopper - capacity 2m3, width 2,8m, heigh 2,3m
- Conveyors- Width 0,44m, max length 4m
- Dump height 0,8 m - 1,8m
- Adjustable belt speed (1.5 - 5.5 m/min)
- Electric engine 0.75kW, 1400 rpm/min, Supply 400V/50Hzz

Ref.No.	L./W./H. [m]	Weight [kg]	Separator	Price €
4341	4/2,85/2,35	500	-	8 253
4342	4/2,85/2,35	500	+	11 878

Charging hopper



Standard equipment:

- Capacity approx. 1m3
- Discharge width 350mm
- Distance of discharge from the ground 700mm

Ref.No	L./W./H. [m]	Weight [kg]	Price €
4340	1/1,5/1,8	130	1 963

Belt conveyor





Standard equipment:

- Horizontal and vertical transport of vegetables
- Electric drive
- Work indoors and outdoors

Ref.No.	L/W/H [m]	Working width of the belt [mm]	Width of the filling hopper [mm]	Height of the filling hopper [mm]	Performance [T/h]	Engine power [kW]	Engine speed control	Weight [kg]	Price €
4310	1/0.8/0.8	300	540	340	approx. 5	0,37	-	60	**2 199**
4310W	1/0.8/0.8	300	540	340	approx. 5	0,37	variator/ 400V	62	**2 574**
4310F	1/0.8/0.8	300	540	340	approx. 5	0,37	inverter / 230V	62	**2 896**
4311	2/0.8/0.9-1.5	300	540	400-450	approx. 5	0,55	-	91	**3 336**
4311W	2/0.8/0.9-1.5	300	540	400-450	approx. 5	0,55	inverter / 400V	93	**3 711**
4311F	2/0.8/0.9-1.5	300	540	400-450	approx. 5	0,55	inverter / 230V	93	**4033**
4312	3/1.1/1.5-2.1	400	1050	500-650	approx. 5	0,75	-	150	**4 478**
4312W	3/1.1/1.5-2.1	400	1050	500-650	approx. 5	0,75	variator/ 400V	152	**4 907**
4312F	3/1.1/1.5-2.1	400	1050	500-650	approx. 5	0,75	inverter / 230V	152	**5 175**
4313	4/1.2/1.75-2.8	400	1100	590-730	approx. 5	0,75	-	230	**5 604**
4313F	4/1.2/1.75-2.8	400	1100	590-730	approx. 5	0,75	inverter / 230V	232	**6 301**
4314	6/1.2/1.9-3.3	400	1200	870	approx. 5	1,1	-	367	**8097**
4314W	6/1.2/1.9-3.3	400	1200	870	approx. 5	1,1	variator/ 400V	369	**8 848**
4315	6/1.2/1.9-3.3	600	1200	870	approx. 5	1,1	-	367	**9009**
4315F	6/1.2/1.9-3.3	600	1200	870	approx. 5	1,1	inverter / 230V	369	**9 786**

Potato sorter





Standard equipment:

- Separation of potato into three size fractions (3 sorting sieves 35×35, 40×40, 45×45)
- Electric engine 0.75kW, 1400 rpm Power: 400V/50Hz
- Inclined belt conveyor with carriers
- Selection table
- Productivity 2 t/h
- Clearance between slats 20mm
- Gripper spacing 260mm

Ref.No.	L./W./H. [m]	Working width [mm]	Width of the filling hopper [mm]	Height of the filling hopper [mm]	Side transporter	Type of sorting table	Sortinh table working width [mm]	Sorting table working length [mm]	Lights	Weight [kg]	Price €
4302P	4,96/1,1/1,9	300	700	660	-	belt	760	1200	-	428	**9 813**
4302	4,96/1,1/1,9	300	700	660	-	rollers	760	1200	-	420	**10 205**
4303	5,6/1,1/1,9	300	700	660	-	rollers	760	1900	+	470	**11 374**
4304	5,8/1,42/1,9	400	1170	850	-	Rollers + manual sorting channel	960	1900	+	560	**14 586**
4305	5,8/1,65/1,9	400	1170	850	+	Rollers + manual sorting channel	960	1900	+	602	**16 623**

Brush cleaning machine





Standard equipment:

- Brush cleaning machine, for dry vegetable cleaning
- Transport on wheels (2 wheels with brake)
- Work indoors and outdoors
- Electric drive
- Productivity - 3-4 t/hh

Ref.No.	L./W./H. [m]	Working width [m]	Engine power [kW]	Fill height [m]	Height of chute [m]	Brush rotation [Rpm]	Brush diam. [mm]	Number of brushes [pcs.]	Weight [kg]	Price €
4320	2,0/0,96/0,9-1,1	0,71	0,55	Ca. 35	< 0,7	Ca. 140	120	10	140	**6 435**
4321	2,40/0,96/0,91-1,1	0,71	0,75	Ca. 35	< 0,7	Ca. 140	120	14	201	**8 580**

Optional equipment	Ref.No.	Price€
Belt rotation speed controller	4320+SC	676

Sorting table





Standard equipment:

- Manual selection of potatoes and vegetables
- Transport on wheels (2 wheels with brake)
- Work indoors and outdoors
- Electric drive
- Center channel for codes 4332;4332F;4332W

Code	L./W/H. [m]	Capacity [M/Min]	Engine power [kW]	Rollers speed [Rpm]	Engine speed control	Weight [kg]	Price €
4330	2,65/0,99/1,00	0,75	0,37	approx. 35	-	190	4 344
4330F	2,65/0,99/1,00	0,75	0,37	approx 35	Inverter 230V	190	5041
4330W	2,65/0,99/1,00	0,75	0,37	approx 35	Variator 400V	190	4719
4331	4,0/1,05/1,14	0,75	0,75	approx. 35	-	300	8580
4331F	4,0/1,05/1,14	0,75	0,75	approx 35	Inverter 230V	300	9277
4331W	4,0/1,05/1,14	0,75	0,75	approx. 35	Variator 400V	300	9009
4332	2,65/1,27/1,03	0,95	0,55	approx. 35	-	220	4 800
4332F	2,65/1,27/1,03	0,95	0,55	approx. 35	Inverter 230V	220	5497
4332W	2,65/1,27/1,03	0,95	0,55	approx. 35	Variator 400V	220	5229

Drum vegetable washer



Standard equipment:

- For washing and cleaning agricultural produce (carrots, celery, beets, potatoes, etc.) from soil residues
- Loading of vegetables via conveyor belt, forklift, or trailer
- Suitable for indoor and outdoor use
- Frame made of welded construction and rotating drum made of perforated sheet metal
- Structure protected with corrosion-resistant primer and topcoat
- 400 V / 50 Hz electric drive

Ref.No.	Caoacity [T/h]	Power demand [kW]	L / W / H [m]	Drum speed [RPM]	Drum length (800mm/500mm) [m]	Weight [kg]	Price [€]
4360	3,0	1,5	3,5 / 1,0 / 1,73	15	1,7 / 0,6	350	**9 315**

Weighing and packaging machine



Standard equipment:

- For packaging agricultural products (onions, carrots, potatoes, etc.)
- Equipped with an electronic scale AXIS ME-01
- The machine stops automatically when the set weight is reached
- 230 V / 50 Hz electric drive

Ref.No.	Capacity [T/h]	Weighing range [kg]	Band width [mm]	L / W / H [m]	Hopper width [m]	Weight [kg]	Price [€]
4370	2,0	2-30	300	3,5 / 0,85 / 2,16	2,16	270	**14 103**

Concrete mixer with double discharge rear + side







Standard equipment:

- 3-point linkage cat. II
- Fixture for pallet forks
- Sheet thickness: side - 5mm, bottom - 6mm
- Height-adjustable reinforced mixing arms 4 pcs. for 600l and 800l and 5 pcs. for 1200l
- Protective grid (in 2 parts for 1200l version)
- Rear and side discharge
- Metal guard on tractor side
- PTO drive

Ref. No.	Max. payload [L]	Total tank volume [L]	Diameter [mm]	Weight [kg]	Price €
2429AJ	400	600	950	350	3 098
2430AJ	600	800	1250	480	4 204
2431AJ	800	1200	1500	570	4 647
2432AJ	1200	1800	1800	760	6 638

PTO drive:

400 rpm MIN. 540 rpm MAX

The PTO is not part of the standard equipment. To connect the mixer to the tractor, use only a power take-off with overload clutch

Hydraulic drive:

Recommended oil flow: 45-80l/min. Not to exceed 120l/min

Optional equipment	Ref. No.	Price €
Hydraulic motor	2429AJ+HM	664
Hydraulic dump opening	2429+HDO	355
Self loading hydraulic bucket	2429AJ+SLB	2 434
PTO shaft 460Nm	WOM460	200
PTO shaft 460Nm, 1010 mm with overload clutch	WOM460/1010SC	484

Concrete mixing bucket

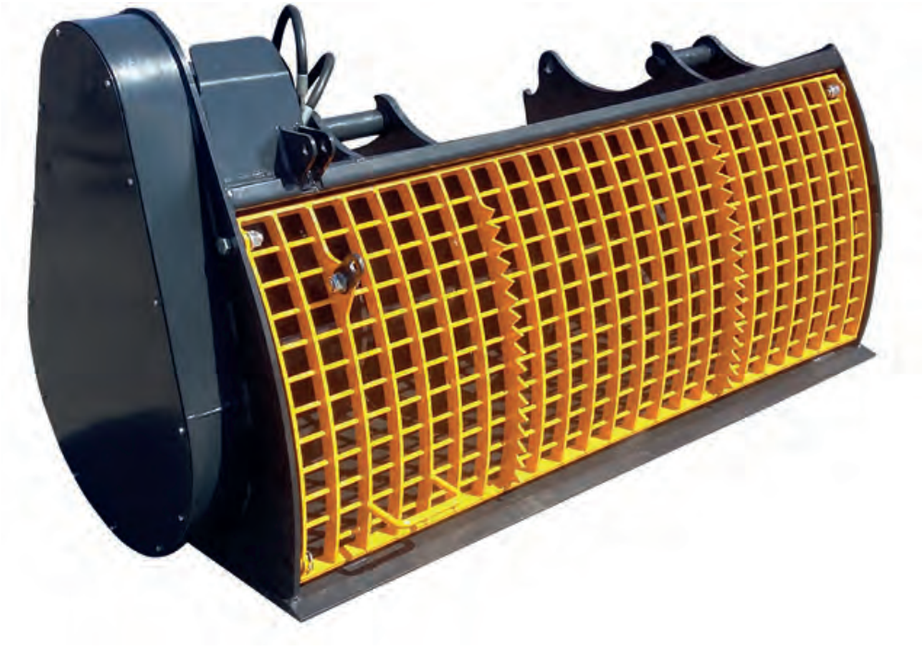



Standard equipment:

- Euro linkage
- 1-section hydraulic connection / two pipes / + controller installation cable
- Height: 1000mm, depth: 1090mm
- Sidewall thickness: 12mm
- Body thickness: 8mm
- Bottom thickness: 15mm
- Blade 150x20mm HB400
- Mixing screw made of abrasion-resistant steel flat bars
- Driven by hydraulic motor
- Central hydraulic drain
- Remote control powered by 12 V tractor system
- Pre-selection grid for broken stones

Ref. No.	Working width [m]	Width [m]	Weight [kg]	Loading capacity [m³]	Price €
2433	1,2	1,4	593	0,44	6 870
2434	1,5	1,7	672	0,53	7 508
2435	1,8	2,0	750	0,62	7 981
2436	2,0	2,2	794	0,68	8 546

Optional equipment	Ref. No.	Price €
Other type of mount	2000+OTM	on request
Drain pipe	2433+RS	237
Anti-spill cover	2433+SST	128

Sweeping machine



Standard equipment:

- Rubber wheels 200/50
- Hydraulic engine with couplings
- Supporting leg
- Brush with a diameter of 500 mm
- Choice of mount: SMS or EURO or 3-point linkage cat. II



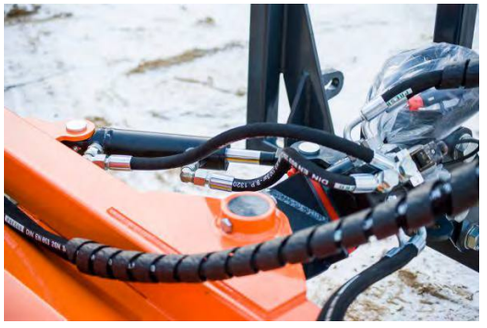

Ref. No.	Working width [m]	Weight [kg]	Price €
5033	1,2	100	3 348
5034	1,4	120	3 411
5036	1,5	130	3 534
5037	1,6	150	3 601
5039	1,8	190	3 652
5041	2,0	220	3 775
5042	2,2	250	3 902
5043	2,4	280	4 022

Optional equipment	Ref. No.	Price €
Hydraulic working angle adjustment	5033+HAA	467
Polypropylene	5033+PPSB	on request
Reinforced aluminium wheels	5003+RSW	99
Other type of mount	5003+OTM	on request

Sweeping machine



Standard equipment:

- Connection with forklift
- Rubber wheels 200/50
- Site copying
- Hydraulic engine with couplings
- Supporting leg
- Required hydraulic flow optimally 40L/MIn/ possible 30L/Min (to indicate when placing an order)
- Brushes with diameter 600mm - brushes plastic
- Choice of mount: SMS or EURO or 3-point linkage cat. II- front or rear





Ref. No.	Working width [m]	Weight [kg]	Price €
5003	1,2	150	4 016
5005	1,4	170	4 127
5008	1,6	190	4 242
5009	1,8	210	4 384
5011	2,0	230	4 495
5013	2,2	250	4 610
5015	2,4	270	4 752

Optional equipment	Ref. No.	Price €
Hydraulic working angle adjustment	5003+HAA	467
Sprinkler system 200l	5003+WSS	1 455
Main polypropylene	5003+PMB	on request
Plastic side brush 500 mm (can be mounted on either side or 2 pcs.)	5003+RSB	1 278
Hydraulic waste container	5003+MWC	1 455
Reinforced aluminum-polyurethane wheels 200mm (1pc)	5003+PW	on request
EURO mount and 3 point linkage	5003+EUROTUZ	261
Polyurethane support wheels (3pcs)	5003+SWP	139
Other type of mount	5003+OTM	on request

Bucket sweeper



Standard equipment:

- 500mm diameter brush - polypropylene
- Hydraulic drive
- Infinitely variable brush height adjustment
- Oil flow 40-60 l/min
- Oil pressure min 140/max 170 bar
- Fits most available buckets and shovels



Ref. No.	Brush width [m] A	Bucket width [m] B	Working width [m] C	Weight [kg]	Price €
5016	1,07	1,20	1,46	245	3 490
5017	1,27	1,40	1,66	270	3 648
5018	1,47	1,60	1,86	295	3 696
5019	1,67	1,80	2,06	320	3 751
5020	1,87	2,00	2,26	345	3 779
5021	2,07	2,20	2,46	370	3 882
5022	2,27	2,40	2,75	390	3 987

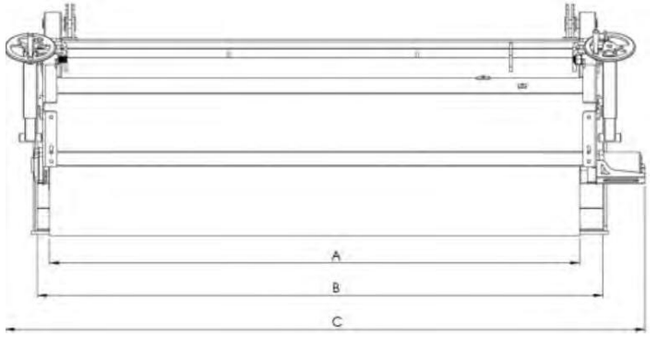

Optional equipment	1,2 [m]	Price €	1,4 [m]	Price €	1,6 [m]	Price €	1,8 [m]	Price €	2,0 [m]	Price €	2,2 [m]	Price €	2,4 [m]	Price €
Bucket, EURO mount	5016+WC	689	5017+WC	790	5018+WC	946	5019+WC	1 015	5020+WC	1 100	5021+WC	1 237	5022+WC	1 512

Sweeping machine





Additional adjustable brush



Version A

Standard equipment:

- 3-point linkage cat II
- 7 or 13 rows (version A) rows or polypropylene brushes diam 3 mm height 250 m
- Passage for pallet forks
- Supporting leg

Ref. No.	Working width [m]	Number of fiber rows [pcs.]	Weight [kg]	Price€
5056	1,5	7	75	1 577
5061	2,0	7	84	1 821
5066	2,5	7	93	2 050
5067	3,0	7	105	2 272

Ref. No.	Working width [m]	Number of fiber rows [pcs.]	Weight [kg]	Price€
5056A	1,50	13	118	2 086
5061A	2,00	13	136	2 406
5066A	2,50	13	154	2 723
5067A	3,00	13	173	3 043

Optional equipment	1,5 [m]	Price€	2,0 [m]	Price€	2,5 [m]	Price€	3,0 [m]	Price€
Other type of mount	5056+OTM	On request	5056+OTM	On request	5056+OTM	On request	5056+OTM	On request
Sweeper attachment	5056+P	911	5061+P	1 100	5066+P	1 290	5067+P	1 480

Super light dozer blade



Standard equipment:

- 3-point linkage cat. III
- Rubber scraper
- 360 ° rotatable blade
- Supporting leg



Ref. No.	Working width [m]	Price€
2570	1,4	1 089
2571	1,6	1 150
2572	1,8	1 276
2573	2,0	1 397
2574	2,2	1 466
2575	2,4	1 649

Optional equipment	1,4	Price €	1,6	Price €	1,8	Price €	2,0	Price €	2,2	Price €	2,4	Price €
Hydraulic control 1 cylinder	2570+HBA	374	2570+HBA	374	2570+HBA	374	2570+HBA	374	2570HBA	374	2570+HBA	374
Hydraulic control 2 cylinders	2570+HBA2	701	2570+HBA2	701	2570+HBA2	701	2570+HBA2	701	2570+HBA2	701	2570+HBA2	701
HARDOX blade	2570+HB	290	2571+HB	332	2572+HB	373	2573+HB	415	2574+HB	456	2575+HB	498
Polyurethane blade	2570+PE	387	2571+PE	442	2572+PE	498	2573+PE	553	2574+PE	608	2575+PE	663

Light dozer blade, mechanical



Standard equipment:

- 3-point linkage cat. II
- Blade height: 540mm
- Blade scraper: 100x12mm (500HB) hardox steel distance between screws 305mm
- Mechanically adjustable blade angle, in steps of 26º with the possibility of 360º rotation of the blade
- Support wheels with mechanical adjustment of working height
- Supporting leg

Ref. No.	Working width [m]	Power demand [HP]	Weight [kg]	Price €
2550	1,8	60	235	**2 661**
2551	2,1	60	260	**2 843**
2552	2,4	60	280	**3 025**
2553	2,7	60	300	**3 135**

Optional equipment	Ref. No.	Price €
Hydraulic blade angle adjustment	2550+HBA	**128**

Heavy duty dozer blade, hydraulic



Standard equipment:

- 3-point linkage cat. III
- Blade height: 720mm, raised to 850mm on one side
- Blade scraper: 200×12 mm (500 HB) steel hardox, distance between screws 305mm
- Hydraulic controled heavy scraper: cylinder rotating the blade for front or rear operation in the range of 230 ° and the cylinder controlling the drawbar tilt in the range of +/- 30 °
- Two support wheels 6,00×9, with mechanical (smooth) adjustment of the scraper working height
- Supporting leg
- Blade overload protection (hydraulic accumulator on the cylinder changing the blade angle)

Ref. No.	Working width [m]	Weight [kg]	Price €
2555bN	2,4	650	**5 904**
2556bN	2,7	670	**6 159**
2557bN	3,0	715	**6 378**

Straight snow plow





Standard equipment:

- 3-point linkage cat. I and II
- Mouldboard height 100 cm
- Mouldboard hydraulic control - two cylinders
- Side ground copying system at the hitch frame in the scope: lateral tilt +/- 5º
- 200×40 mm split rubber strip, tilted on springs
- Set of wheels Ø 250mm with mechanical height adjustment, wheels with 75x35mm solid tires
- Led lights

Ref. No.	Working width [m]	Weight [kg]	Price€
5070	2,0	440	3 780
5071	2,5	480	4 054
5072	2,7	510	4 187
5073	3,0	530	4 390

Optional equipment	2,0	Price€	2,5	Price€	2,7	Price€	3,0	Price€
HARDOX blade	5070+HB	115	5071+HB	141	5072+HB	157	5073+HB	172
Hydraulic lifting system	5070+HLS	755	5070+HLS	755	5070+HLS	755	5070+HLS	755
Hydraulic overload protection	5070+OHP	573	5070+OHP	573	5070+OHP	573	5070+OHP	573
Slides 500 HB instead of wheels	5070+SHB500	365	5070+SHB500	365	5070+SHB500	365	5070+SHB500	365
Other type of mount	2000+OTM	On request	2000+OTM	On request	2000+OTM	On request	2000+OTM	On request

Heavy duty snow plow divided



Standard equipment:

- 3-point linkage cat. I and II
- Mouldboard height: 100 cm
- Mouldboard adjustment angle up to 35 ° for v and parallel systems (17,5 ° per side)
- 250×40 mm rubber strip, hinged on springs
- Electro-hydraulic control of the plow arms (one hydraulic section, connection to the 12v electrical system)
- Side terrain copying system in the scope: lateral tilt +/- 5⁰
- Set of wheels Ø 250mm with smooth height adjustment, wheels with 75x35mm solid tires
- Led lights



Ref. No.	Working width [m]	Weight [kg]	Price€
5076	2,8	600	5 811
5077	3,0	650	6 010

Optional equipment	2,8	Price€	3,0	Price€
Hydraulic lifting system	5076+HLS	755	5076+HLS	755
Hydraulic overload protection	5076+HP	573	5076+HP	573
Slides 500 HB instead of wheels	5076+SHB500	365	5076+SHB500	365
HARDOX blade	5076+HB	172	5077+HB	193
Other type of mount	2000+OTM	On request	2000+OTM	On request

Super light straight snow plow







Standard equipment:

- Communal triangle hitch
- Mouldboard height 56 cm
- Mouldboard turning angle (right and left) up to 30 °
- Mouldboard hydraulic control
- Side ground copying system at the hitch frame in the range of: lateral tilt +/- 5º
- Collision protection: tilting mouldboard (spring protection)
- 30 mm rubber strip
- Required number of hydraulic connections 2 (1 pair)
- LED lights

Ref. No.	Working width [m]	Dimensions (L./W./H.) [m]	Weight [kg]	Price €
5100	1,20	0,58 / 1,2 / 0,59	120	1 679
5101	1,50	0,58 / 1,5 / 0,59	130	1 779
5102	1,80	0,58 / 1,8 / 0,59	140	1 879
5103	2,00	0,58 / 2,0 / 0,59	150	1 978

Optional equipment	1,2 [m]	Price €	1,5 [m]	Price €	1,8 [m]	Price €	2.0 [m]	Price €
High resistant steel blade 150x16 mm	5100+HB	174	5101+HB	218	5102+HB	261	5103+HB	290
Polyurethane blade 150x25 mm	5100+PE	265	5101+PE	331	5102+PE	397	5103+PE	441
Skids	5100+SHB	185	5100+SHB	185	5100+SHB	185	5100+SHB	185
3 point linkage cat. 0	5100+TUZ0	without extra charge	5100+TUZ0	without extra charge	5100+TUZ0	without extra charge	5100+TUZ0	without extra charge
Other type of mount	2000+OTM	on request	2000+OTM	on request	2000+OTM	on request	2000+OTM	on request

Super light divided snow plow







Standard equipment:

- Communal triangle hitch
- Mouldboard height 65,5/57,0cm
- Mouldboard turning angle (right and left) up to 30 °
- Mouldboard hydraulic control, 2 cylinders
- Side ground copying system at the hitch frame in the range of: lateral tilt +/- 5º
- Blade spring protection
- 30 mm rubber strip
- Required number of hydraulic connections 2 (1 pair)
- LED lights

Ref. No.	Working width[m]	Dimensions (L./W./H.) [m]	Weight [kg]	Price€
5104	1,30	0,75 / 1,3 / 0,65	140	2 344
5105	1,50	0,75 / 1,5 / 0,65	160	2 476
5106	1,80	0,75 / 1,8 / 0,65	175	2 576
5107	2,00	0,75 / 2,0 / 0,65	190	2 709

Optional equipment	1,2 [m]	Price€	1,5 [m]	Price€	1,8 [m]	Price€	2.0 [m]	Price€
High resistant steel blade 150x16 mm	5104+HB	189	5105+HB	218	5106+HB	261	5107+HB	290
Polyurethane blade 150x25 mm	5104+PE	287	5105+PE	331	5106+PE	397	5107+PE	441
Skids	5100+SHB	185	5100+SHB	185	5100+SHB	185	5100+SHB	185
3 point linkage cat. 0	5100+TUZ0	withought extra charge	5100+TUZ0	withought extra charge	5100+TUZ0	withought extra charge	5100+TUZ0	withought extra charge
Other type of mount	2000+OTM	On request	2000+OTM	On request	2000+OTM	On request	2000+OTM	On request

Light straight snow plow



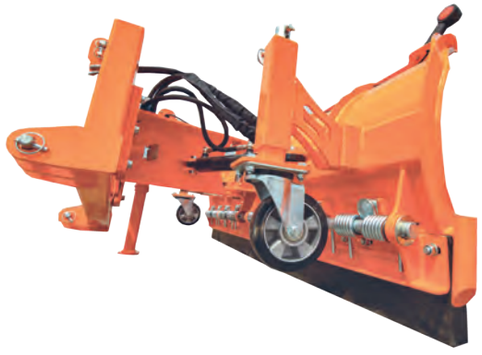



Standard equipment:

- 3-point linkage cat. I
- Mouldboard height 75,0/65,0cm
- Mouldboard turning angle (right and left) up to 30 °
- Mouldboard hydraulic control - 2 cylinders
- Side ground copying system at the hitch frame in the range of: lateral tilt +/- 5º
- Blade spring protection
- 50 mm rubber strip
- Required number of hydraulic connections 2 (1 pair)
- LED lights

Ref. No.	Working width [m]	Dimensions (L./W./H.) [m]	Weight[kg]	Price€
5108	1,80	0,75 / 1,8 / 0,7	220	2 045
5109	2,00	0,75 / 2,0 / 0,7	240	2 244
5110	2,20	0,75 / 2,2 / 0,7	260	2 410

Optional equipment	1,8 [m]	Price€	2,0 [m]	Price€	2,2 [m]	Price€
High resistant steel blade 150x16 mm	5108+HB	261	5109+HB	290	5110+HB	319
Polyurethane blade 150x25 mm	5108+PE	397	5109+PE	441	5110+PE	485
Supporting wheels 160/50	5108+TI160	312	5108+TI160	312	5108+TI160	312
Supporting wheels 200/50	5108+TI200	402	5108+TI200	402	5108+TI200	402
Skids	5100+SHB	185	5100+SHB	185	5100+SHB	185
3 point linkage cat.I and II or EURO mount and 3 point linkage cat. II	5108+K	167	5108+K	167	5108+K	167

Light divided snow plow

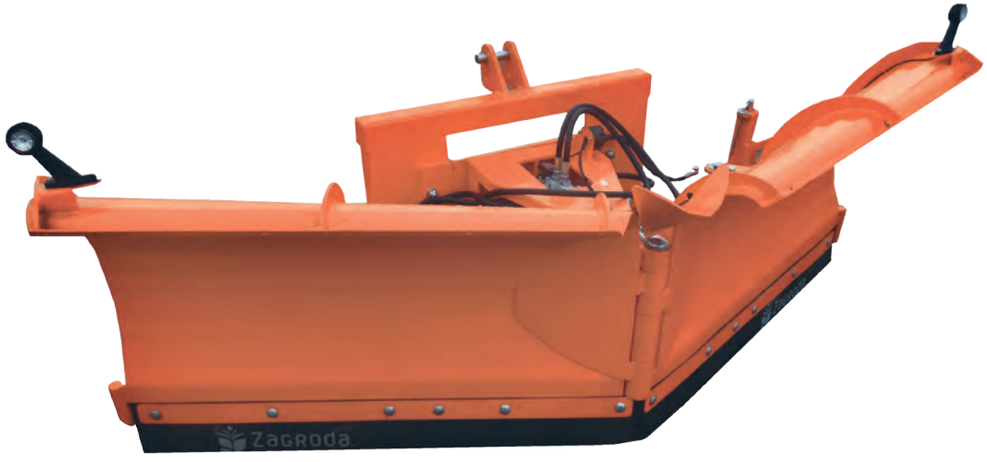



Standard equipment:

- 3-point linkage cat. I
- Mouldboard height 75,0/65,0cm
- Mouldboard turning angle (right and left) up to 30 °
- Mouldboard hydraulic control, two cylinders
- Side ground copying system at the hitch frame in the range of: lateral tilt +/- 5º
- Blade spring protection
- 50 mm rubber strip
- Required number of hydraulic connections 2 (1 pair)
- LED lights

Ref. No.	Working width [m]	Dimensions (L./W./H.) [m]	Weight [kg]	Price€
5111	1,80	0,92 / 1,8 / 0,75	240	3 068
5112	2,00	0,92 / 2,0 / 0,75	260	3 307
5113	2,20	0,92 / 2,2 / 0,75	280	3 545

Optional equipment	1,8 [m]	Price€	2,0 [m]	Price€	2,2 [m]	Price€
High resistant steel blade 150x16 mm	5111+HB	261	5112+HB	290	5113+HB	319
Polyurethane blade 150x25 mm	5111+PE	397	5112+PE	441	5113+PE	485
Supporting wheels 160/50	5108+TI160	312	5108+TI160	312	5108+TI160	312
Supporting wheels 200/50	5108+TI200	402	5108+TI200	402	5108+TI200	402
Skids	5100+SHB	185	5100+SHB	185	5100+SHB	185
3 point linkage cat.I and II or EURO mount and 3 point linkage cat. II	5108+K	167	5108+K	167	5108+K	167
Other type of mount	2000+OTM	On request	2000+OTM	On request	2000+OTM	On request

Universal straight snow plow



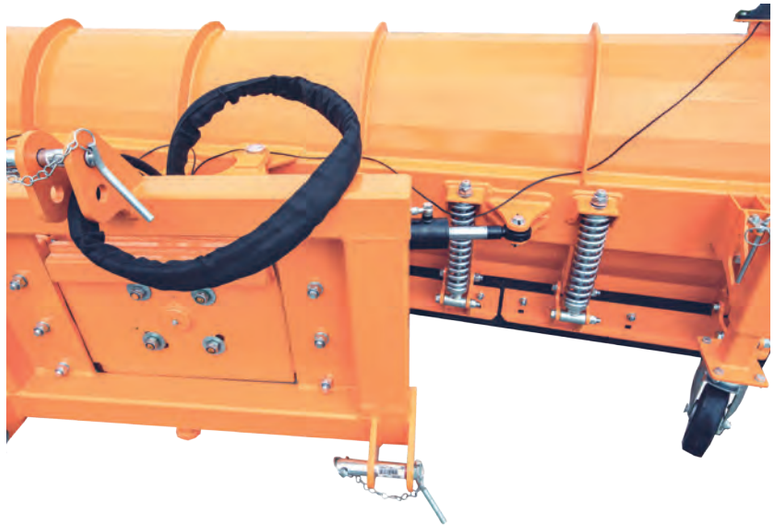

Standard equipment:

- 3-point linkage cat. II
- Mouldboard height 90,0/83,0cm
- Mouldboard turning angle (right and left) up to 30 °
- Mouldboard hydraulic control - two cylinders
- Side ground copying system at the hitch frame in the range of: lateral tilt +/- 5º
- Blade spring protection
- 50 mm rubber strip, holes with a pitch of 305 mm
- Required number of hydraulic connections 2 (1 pair)
- LED lights

Ref. No.	Working width [m]	Dimensions (L./W./H.) [m]	Weight [kg]	Price€
5114	2,20	1,2 / 2,2 / 0,9	360	3 307
5115	2,50	1,2 / 2,5 / 0,9	380	3 440
5116	2,70	1,2 / 2,7 / 0,9	400	3 573
5117	3,00	1,2 / 3,0 / 0,9	440	3 905

Optional equipment	2,2 [m]	Price€	2,5 [m]	Price€	2,7 [m]	Price€	3,0 [m]	Price€
High resistant steel blade 150x16 mm	5114+HB	319	5115+HB	363	5116+HB	392	5117+HB	435
Polyurethane blade 150x25 mm	5114+PE	485	5115+PE	552	5116+PE	579	5117+PE	662
Supporting wheels 160/50	5108+TI160	312	5108+TI160	312	5108+TI160	312	5108+TI160	312
Supporting wheels 200/50	5108+TI200	402	5108+TI200	402	5108+TI200	402	5108+TI200	402
Skids	5100+SHB	185	5100+SHB	185	5100+SHB	185	5100+SHB	185
Hydraulic overload protection	5114+OHP	767	5114+OHP	767	5114+OHP	767	5114+OHP	767
3 point linkage cat.I and II or EURO mount and 3-point linkage	5108+K	167	5108+K	167	5108+K	167	5108+K	167
Mount for teleshandlers or mini loader	2000+OTM	On request	2000+OTM	On request	2000+OTM	On request	2000+OTM	On request

Universal divided snow plow







Standard equipment:

- 3-point linkage cat. II
- Mouldboard height 90,0/83,0cm
- Mouldboard turning angle (right and left) up to 30 °
- Mouldboard hydraulic control - two cylinders
- Side ground copying system at the hitch frame in the range of: lateral tilt +/- 5º
- Blade spring protection
- Rubber strip: 50 mm
- LED lights

Ref. No.	Working width [m]	Dimensions (L/W/H.) [m]	Weight[kg]	Price €
5118	2,20	1,2 / 2,2 / 0,9	380	4 182
5119	2,50	1,2 / 2,5 / 0,9	400	4 382
5120	2,70	1,2 / 2,7 / 0,9	440	4 623
5121	3,00	1,2 / 3,0 / 0,9	480	4 862

Optional equipment	2,2 [m]	Price€	2,5 [m]	Price€	2,7 [m]	Price€	3,0 [m]	Price€
High resistant steel blade 150x16 mm	5118+HB	319	5119+HB	363	5120+HB	392	5121+HB	435
Polyurethane blade 150x25 mm	5118+PE	485	5119+PE	552	5120+PE	596	5121+PE	662
Supporting wheels 160/50	5108+TI160	312	5108+TI160	312	5108+TI160	312	5108+TI160	312
Supporting wheels 200/50	5108+TI200	402	5108+TI200	402	5108+TI200	402	5108+TI200	402
Skids	5100+SHB	185	5100+SHB	185	5100+SHB	185	5100+SHB	185
Hydraulic overload protection	5114+OHP	767	5114+OHP	767	5114+OHP	767	5114+OHP	767
3-point linkage cat.I and II or EURO mount and 3-point linkage	5108+K	167	5108+K	167	5108+K	167	5108+K	167
Mount for teleshandlers or mini loader	2000+OTM	On request	2000+OTM	On request	2000+OTM	On request	2000+OTM	On request

Snow blower





Standard equipment:

- 3-point linkage cat. II
- PTO drive
- Hydraulic chute rotation
- Mechanical ejection angle control
- One screw

Version H

- Euro linkage
- Hydraulic drive

Ref. No.	Working width [m]	Weight [kg]	Price €
2440A	1,2	380	6 610
2441A	1,5	420	6 942
2442A	1,8	550	8 138
2443A	2,0	620	8 802

Ref. No.	Working width [m]	Weight[kg]	Price€
2440AH	1,2		7 878
2441AH	1,5		8 210
2442AH	1,8		9 406
2443AH	2,0		10 070

Optional equipment	Ref. No.	Price €
Other type of mount	2000+OTM	On request

Self loading sand spreader





Standard equipment:

- 3-point linkage cat. II
- Crumbling shaft
- Metering shaft
- Hydraulic drive
- Chain transmission, transmitting the drive from a hydraulic motor
- Mechanical adjustment of the amount of sand dump - lever
- Fixed discharge width
- Hydraulic loading of the load box (double-acting hydraulic cylinder)
- 2-sections hydraulic connection (4 wires)
- Road lights

Ref. No.	Working width [m]	Transport width [m]	Volume [m³]	Weight [kg]	Price €
5224	1,33	1,7	0,75	470	5 554
5225	1,83	2,2	1,0	550	7 213

Single-disc salt and sand distributor RX







Standard equipment:

- Plastic hopper
- Gear box
- 6-blade spreading disc
- Three levers for spreading adjustment
- Sieve

Ref. No.	Loading capacity [kg]	Weight [kg]	Power demand [HP]	Price €
5220RX	200	65	21	714
5221RX	300	68	21	714
5222RX	350	70	21	714
5223RX	400	73	21	740

Optional equipment	Ref. No.	Price €
Top cover	5220RX+T	53
Hydraulic opening	5220RX+HO	79
LED Lights	8000+LED19	On request

Belt salt and sand distributor







Standard equipment:

- 3-point linkage cat. II
- PTO drive
- Laminated polyester frame
- Distributor via conveyor belt
- One stainless steel disc
- Mehanical continuous flow adjustment

Ref. No.	Loading capacity [m³]	Weight [kg]	Price €
5223A	0,4	145	3 683

Optional equipment	Code	Price €
Stainless steel version	5223A+IS	84
PTO shaft 270 Nm, 510 mm	WOM270/510	76

Universal bucket standard



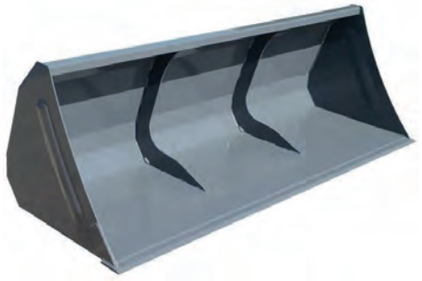

Standard equipment:

- Standard version with a reinforcing rib, sheet thickness: sides 5mm, body: 4mm, height: 655mm; depth: 785mm
- Bottom with flat bar reinforcement
- Brackets mounting reinforced with flat bar
- Blade 110x12mm (500hb)
- EURO mount

Version G

- G version with an insert

Ref. No.	Working width [m]	Loading capacity [m³]	Weight [kg]	Price €
2008A	1,4	0,39	145	843
2002A	1,5	0,42	150	873
2005A	1,6	0,45	160	903
2003A	1,8	0,5	180	964
2004A	2,0	0,56	190	1 057
2006A	2,2	0,62	205	1 205
2007A	2,4	0,67	220	1 353
2008GA	1,4	0,39	145	885
2002GA	1,5	0,42	150	917
2005GA	1,6	0,45	160	948
2003GA	1,8	0,5	180	1 012
2004GA	2,0	0,56	190	1 110
2006GA	2,2	0,62	205	1 266
2007GA	2,4	0,67	220	1 421

Optional equipment	Ref. No.	Price €
Other type of mount	2000+OTM	On request

Universal bucket RX





Standard equipment:

- Version with ribs
- Sheet thickness sides: 4 mm
- Sheet thickness body: 4 mm (5mm in 2,4m)
- Height: 660 mm, depth: 720 mm
- Bar reinforcement
- EURO mount

Ref. No.	Working width [m]	Loading capacity [m³]	Weight [kg]	Price €
2001RX	1,20	0,32	115	656
2002RX	1,50	0,40	130	711
2003RX	1,80	0,48	150	820
2004RX	2,00	0,54	165	875
2006RX	2,20	0,59	175	957
2007RX	2,40	0,75	190	1094

Optional equipment	Ref. No.	Price €
Other type of mount	2000+OTM	On request

Volume bucket with rib reinforcement



Standard equipment:

- Euro mount
- Reinforced with rib(s)
- Side wall thickness: 5 mm, shell thickness: 5 mm
- Height: 750 mm, depth: 930 mm
- Cutting edge: HB500 / 110×16 mm

Ref.No.	Working width [m]	Loading capacity [m3]	Weight [kg]	Price €
2120	1,0	0,38	170	930
2121	1,1	0,42	180	964
2122	1,2	0,46	190	994
2123	1,3	0,49	195	1024
2124	1,4	0,53	205	1057
2125	1,5	0,57	215	1115
2126	1,6	0,61	225	1142
2127	1,8	0,68	255	1326
2128	2,0	0,76	275	1447
2129	2,2	0,84	295	1571
2131	2,4	0,91	310	1719
2132	2,5	0,95	315	1791

Optional equipment	Ref.No.	Price €
Other type of mount	2000+OTM	On request
Bolted teeth	2120+TH	See page 107

Volume bucket with semicircular insert



Standard equipment:

- Euro mount
- Reinforced with semicircular insert
- Side wall thickness: 5 mm, shell thickness: 5 mm
- Height: 750 mm, depth: 930 mm
- Cutting edge: HB500 / 110×16 mm

Ref.No.	Working width [m]	Loading capacity [m3]	Weight [kg]	Price €
2120G	1,0	0,38	170	977
2121G	1,1	0,42	180	1012
2122G	1,2	0,46	190	1044
2123G	1,3	0,49	195	1075
2124G	1,4	0,53	205	1110
2125G	1,5	0,57	215	1170
2126G	1,6	0,61	225	1199
2127G	1,8	0,68	255	1392
2128G	2,0	0,76	275	1519
2129G	2,2	0,84	295	1649
2131G	2,4	0,91	310	1804
2132G	2,5	0,95	315	1881

Optional equipment	Ref.No.	Price €
Other type of mount	2000+OTM	On request
Bolted teeth	2120+TH	See page 107

CORE volume bucket with rib reinforcement



Standard equipment:

- Euro mount
- Reinforced with rib(s)
- Side wall thickness: 6 mm, steel thickness: 5 mm
- Height: 820 mm, depth: 990 mm
- Cutting edge: HB500 / 110×16 mm

Ref.No.	Working width [m]	Loading capacity [m3]	Weight [kg]	Price €
2120A	1,0	0,42	180	961
2121A	1,1	0,46	190	994
2122A	1,2	0,50	200	1018
2123A	1,3	0,55	205	1057
2124A	1,4	0,59	215	1091
2125A	1,5	0,63	225	1142
2126A	1,6	0,67	235	1187
2127A	1,8	0,76	260	1371
2128A	2,0	0,84	285	1492
2129A	2,2	0,92	300	1616
2131A	2,4	1,01	320	1779
2132A	2,5	1,05	325	1812

Optional equipment	Ref.No.	Price €
Other type of mount	2000+OTM	On request
Bolted teeth	2120+TH	See page 107

CORE volume bucket with semicircular insert



Standard equipment:

- Euro mount
- Reinforced with semicirucular insert
- Side wall thickness: 6 mm, steel thickness: 5 mm
- Height: 820 mm, depth: 990 mm
- Cutting edge: HB500 / 110×16 mm

Ref.No.	Working width [m]	Loading capacity [m3]	Weight [kg]	Price €
2120AG	1,0	0,42	180	1009
2121AG	1,1	0,46	190	1044
2122AG	1,2	0,50	200	1069
2123AG	1,3	0,55	205	1110
2124AG	1,4	0,59	215	1145
2125AG	1,5	0,63	225	1199
2126AG	1,6	0,67	235	1246
2127AG	1,8	0,76	260	1440
2128AG	2,0	0,84	285	1567
2129AG	2,2	0,92	300	1697
2131AG	2,4	1,01	320	1868
2132AG	2,5	1,05	325	1903

Optional equipment	Ref.No.	Price €
Other type of mount	2000+OTM	On request
Bolted teeth	2120+TH	See page 107

MEGA volume bucket with rib reinforcement



Standard equipment:

- Euro mount
- Reinforced with rib(s)
- Side wall thickness: 5 mm, shell thickness: 5 mm
- Height: 900 mm, depth: 1180 mm
- Cutting edge: HB500 / 110×16 mm

Ref.No.	Working width [m]	Loading capacity [m3]	Weight [kg]	Price €
2126B	1,6	1,01	270	1933
2127B	1,8	1,13	290	2039
2128B	2,0	1,26	320	2193
2129B	2,2	1,39	340	2431
2130B	2,3	1,45	360	2510
2131B	2,4	1,51	370	2664
2132B	2,5	1,58	380	2875

Optional equipment	Ref.No.	Price €
Other type of mount	2000+OTM	On request
Bolted teeth	2120+TH	See page 107

MEGA volume bucket with semicircular insert



Standard equipment:

- Euro mount
- Reinforced with semicircular insert
- Side wall thickness: 5 mm, shell thickness: 5 mm
- Height: 900 mm, depth: 1180 mm
- Cutting edge: HB500 / 110×16 mm

Ref.No.	Working width [m]	Loading capacity [m3]	Weight [kg]	Price €
2126BG	1,6	1,01	270	2030
2127BG	1,8	1,13	290	2141
2128BG	2,0	1,26	320	2302
2129BG	2,2	1,39	340	2553
2130BG	2,3	1,45	360	2635
2131BG	2,4	1,51	370	2797
2132BG	2,5	1,58	380	3019

Optional equipment	Ref.No.	Price €
Other type of mount	2000+OTM	On request
Bolted teeth	2120+TH	See page 107

GIGA volume bucket with rib reinforcement



Standard equipment:

- Euro attachment
- Reinforced with rib(s)
- Side wall thickness: 6 mm, shell thickness: 8 mm
- Height: 1070 mm, depth: 1420 mm
- Cutting edge: HB500 / 150×20 mm

Ref.No.	Working width [m]	Loading capacity [m3]	Weight [kg]	Price €
2127C	1,8	1,62	550	2887
2128C	2,0	1,80	560	3068
2129C	2,2	1,98	570	3180
2130C	2,3	2,07	580	3252
2131C	2,4	2,16	590	3397
2132C	2,5	2,25	600	3545

Optional equipment	Ref.No.	Price €
Other type of mount	2000+OTM	On request
Bolted teeth	2120+TH	See page 107

GIGA volume bucket with semicircular insert



Standard equipment:

- Euro mount
- Reinforced with semicircular insert
- Side wall thickness: 6 mm, shell thickness: 8 mm
- Height: 1070 mm, depth: 1420 mm
- Cutting edge: HB500 / 150×20 mm

Ref.No.	Working width [m]	Loading capacity [m3]	Weight [kg]	Price €
2127CG	1,8	1,62	550	3031
2128CG	2,0	1,80	560	3222
2129CG	2,2	1,98	570	3339
2130CG	2,3	2,07	580	3415
2131CG	2,4	2,16	590	3567
2132CG	2,5	2,25	600	3723

Optional equipment	Ref.No.	Price €
Other type of mount	2000+OTM	On request
Bolted teeth	2120+TH	See page 107

TERA volume bucket with rib reinforcement



Standard equipment:

- Euro mount
- Reinforced with rib(s)
- Side wall thickness: 6 mm, shell thickness: 8 mm
- Height: 1185 mm, depth: 1550 mm
- Cutting edge: HB500 / 150×20 mm

Ref.No.	Working width [m]	Loading capacity [m3]	Weight [kg]	Price €
2127D	1,8	2,03	590	3397
2128D	2,0	2,26	600	3545
2129D	2,2	2,49	610	3708
2130D	2,3	2,60	620	3799
2131D	2,4	2,71	640	3911
2132D	2,5	2,83	660	4074

Optional equipment	Ref.No.	Price €
Other type of mount	2000+OTM	On request
Bolted teeth	2120+TH	See page 107

TERA volume bucket with semicircular insert



Standard equipment:

- Euro mount
- Reinforced with semicircular insert
- Side wall thickness: 6 mm, shell thickness: 8 mm
- Height: 1185 mm, depth: 1550 mm
- Cutting edge: HB500 / 150×20 mm

Ref.No.	Working width [m]	Loading capacity [m3]	Weight [kg]	Price €
2127DG	1,8	2,03	590	3567
2128DG	2,0	2,26	600	3723
2129DG	2,2	2,49	610	3894
2130DG	2,3	2,60	620	3989
2131DG	2,4	2,71	640	4106
2132DG	2,5	2,83	660	4277

Optional equipment	Ref.No.	Price €
Other type of mount	2000+OTM	On request
Bolted teeth	2120+TH	See page 107

Bolted teeth for buckets



Optional equipment for products on pages 102 to 106

Optional equipment	Ref. No.	Price €
Bolted teeth for buckets with a width of 1,0 m	2120+TH	85
Bolted teeth for buckets with a width of 1,1 m	2121+TH	106
Bolted teeth for buckets with a width of 1,2 m	2122+TH	106
Bolted teeth for buckets with a width of 1,3 m	2123+TH	106
Bolted teeth for buckets with a width of 1,4 m	2124+TH	127
Bolted teeth for buckets with a width of 1,5 m	2125+TH	127
Bolted teeth for buckets with a width of 1,6 m	2126+TH	148
Bolted teeth for buckets with a width of 1,8 m	2127+TH	148
Bolted teeth for buckets with a width of 2,0 m	2128+TH	170
Bolted teeth for buckets with a width of 2,2 m	2129+TH	170
Bolted teeth for buckets with a width of 2,3 m	2130+TH	191
Bolted teeth for buckets with a width of 2,4 m	2131+TH	191
Bolted teeth for buckets with a width of 2,5 m	2132+TH	212

High volume bucket, mini





Version G

Standard equipment:

- Reinforced with ribbs
- Height: 630mm, depth: 830mm
- Steel thickness: body 4mm
- Sheet thickness: sides 5 mm
- Bottom reinforced with flat bars
- Reinforcement of shell for fastening the hooks
- Blade: 110x12mm (400 HB)
- Without mount or Euro mount from 1.2m

Version G

- Semicircular insert reinforcement

Ref. No.	Working width [m]	Capacity [m³]	Weight[kg]	Price €
2761	0,9	0,24	95	**675**
2762	1,1	0,29	110	**748**
2763	1,2	0,32	115	**784**
2764	1,4	0,37	130	**820**
2765	1,5	0,39	135	**857**
2766	1,6	0,42	140	**912**
2766A	1,8	0,45	150	**984**

Optional equipment	Ref. No.	Price €
Other type of mount	2000+OTM	**On request**

Ref. No.	Working width [m]	Capacity [m³]	Weight [kg]	Price €
2761G	0,9	0,24	95	**729**
2762G	1,1	0,29	110	**839**
2763G	1,2	0,32	115	**875**
2764G	1,4	0,37	130	**912**
2765G	1,5	0,39	135	**948**
2766G	1,6	0,42	140	**984**
2766AG	1,8	0,45	150	**1 021**

Optional equipment	Ref. No.	Price €
Other type of mount	2000+OTM	**On request**

High tip bucket standard



Standard equipment:

- Insert reinforcement: height: 770mm, depth: 920mm
- Sheet thickness: body 5mm
- Sheet thickness: bottom 5mm, flat bar reinforcement
- Sheet thickness: sides 6mm
- Blade 110x16mm (500hb)
- Buckets for loose materials with a density not exceeding 900 kg / m³
- Discharge angle for standard shovels approx. 120 °
- EURO mount

Ref. No.	Working width [m]	Loading capacity [m³]	Weight [kg]	Price €
2055	1,40	0,5	381	**3 189**
2056	1,60	0,58	411	**3 335**
2057	1,80	0,65	441	**3 462**
2058	2,00	0,72	471	**3 608**
2059	2,20	0,79	501	**3 827**

Optional equipment	Ref. No.	Price €
Pressure relief valve VMP	2000+OTV	128
Other type of mount	2000+OTM	On request

High tip bucket heavy



Standard equipment:

- Height: 1180mm ,depth: 1310mm
- Total depth with arms: 1730mm
- Sheet thickness: body 6mm
- Sheet thickness: sides 8mm
- Thickness: arms 15mm
- Blade: 150 x 15mm (400HB)
- Bottom reinforced with a flat bar
- Two cylinders
- EURO mount

Ref. No.	Working width [m]	Loading capacity [m³]	Weight [kg]	Price €
2720	1,80	1,84	912	**6 378**
2721	2,00	2,07	978	**6 742**
2722	2,20	2,30	1044	**7 180**
2724	2,40	2,53	1110	**7 471**
2724A	2,60	2,76	1176	**7 872**

Optional equipment	Ref. No.	Price €
Other type of mount	2000+OTM	**On request**

Multipurpose bucket 4 in 1 standard



Standard equipment:

- Height: 850mm; depth: 860mm
- Sheet thickness: body 8mm
- Sheet thickness: side walls and ribs 10mm
- Blade 110x16mm (HB500)
- EURO mount

Ref. No.	Workina width [m]	Loading capacity [m³]	Weight [kg]	Price €
2015AA	1,40	0,43	310	2 431
2016AA	1,60	0,5	350	2 697
2017A	1,80	0,56	370	2 917
2018A	2,00	0,62	400	3 141
2019A	2,20	0,68	430	3 455
2020A	2,40	0,74	460	3 672

Multipurpose bucket 4 in 1 mini



Standard equipment:

- Height: 700mm, depth: 760mm
- Sheet thickness: body 5mm
- Sheet thickness: sides 8mm
- Blade: 110x16mm (400HB)
- Opening height 700mm
- Without mount or Euro mount 1.6m

Ref. No.	Working widt [m]	Loadingcapacity[m³]	Weight [kg]	Price €
2786L	1,1	0,23	190	2 059
2787L	1,2	0,25	200	2 132
2788L	1,4	0,29	235	2 223
2790L	1,6	0,34	255	2 369

Version standard

Optional equipment	1,4	Price€	1,6	Price€	1,8	Price€	2,0	Price€	2,2	Price€	2,4	Price€
Teeth lightweight - 175mm spacing	2015AA+LT	127	2016AA+LT	148	2017A+LT	170	2018A+LT	170	2019A+LT	191	2020A+LT	191
Oil flow divider	2000+HFDA								On request			
Other type of mount	2000+OTM								On request			

Version mini

Optional equipment	1,0 [m]	Price €	1,1 [m]	Price €	1,2 [m]	Price €	1,4 [m]	Price €	1,6 [m]	Price €
Teeth lightweight - 175mm spacing	2785L+LT	146	2786L+LT	146	2787L+LT	146	2788L+LT	175	2790L+LT	175
Oil flow divider	2000+HFD						347			
Other type of mount	2000+OTM						On request			

Multipurpose bucket 4 in 1 heavy



Standard equipment:

- Height: 940mm, depth: 920mm
- Steel thickness: 10mm
- Bottom thickness: 10mm
  + reinforced 8mm
- Sidewall and reinforcement thickness: 10mm and 12mm
- Blade: 150 x 20mm (400 HB)
- Opening height: 730mm
- Euro mount or no mount

Ref. No.	Working width[m]	Loading capacity [m3]	Number of tines [pcs.]	Weight [kg]	Price €
2735	1,8	0,63	5	545	4 009
2736	2,0	0,70	6	570	4 374
2737	2,2	0,77	7	600	4 738
2738	2,4	0,84	8	630	5 102

Optional equipment	1,8 [m]	Price€	2,0 [m]	Price€	2,2 [m]	Price€	2,4 [m]	Price€
Oil flow divider	2000+HFD	347	2000+HFD	347	2000+HFD	347	2000+HFD	347
Teeth lightweight	2735+HT	263	2736+HT	350	2737+HT	350	2738+HT	350
Other type of mount			2000+OTM	On request				

Bucket with grapple, standard



Standard equipment:

- Height: 820mm, depth: 980mm
- 2 hydraulic cylinders
- Forged high tines 680mm
- Opening height: 1220mm
- Bottom thickness: 5mm - reinforced with flat bars 100x8
- Steel thickness: 5mm, sides: 10mm, bolted cheeks: 5mm
- Blade: 110x16mm (400 HB)
- Euro mount

Ref. No.	Working width [m]	Number of tines [pcs]	Loading capacity[m³]	Weight [kg]	Price €
2061A	1,2	6	0,65	305	**1 885**
2062A	1,4	7	0,76	315	**2 081**
2063A	1,5	7	0,81	325	**2 093**
2064A	1,6	8	0,86	340	**2 150**
2065A	1,8	8	0,97	385	**2 313**
2066A	2,0	9	1,08	425	**2 519**
2067A	2,2	10	1,19	445	**2 712**
2068A	2,4	11	1,30	470	**2 917**

Bucket with grapple RX



Standard equipment

- Height: 880 mm, depth: 1000mm
- 2 hydraulic cylinders
- Forged high tines 660mm
- Bottom thickness: 5mm - reinforced with 80x15 flat bars
- Steel thickness: 8mm, sides: 8mm, bolted cheeks: 8mm
- Wear blade: 100x15 mm
- Euro mount

Ref. No.	Working width [m]	Number of tines [pcs.]	Loading capacity [m³]	Weight [kg]	Price €
2061RX	1,2	5	0,5	191	**1 562**
2062RX	1,4	6	0,6	205	**1 771**
2063RX	1,5	6	0,75	284	**1 875**
2064RX	1,6	6	0,8	302	**1 927**
2065RX	1,8	7	0,9	332	**2 057**
2066RX	2,0	8	1,0	351	**2 177**
2067RX	2,2	9	1,1	372	**2 291**
2068RX	2,4	10	1,2	470	**2 603**

Optional equipment	Ref. No.	Price €
Other type of mount	2000+OTM	On request

zagroda

Bucket with grabs for mini



Standard equipment:

- Height: 716mm, depth: 840mm
- Steel thickness: 5mm, cheeks: 10mm
- Opening height: 942mm
- Forged high teeth: 585mm
- Blade 110x12mm (500 HB)
- 2 bolted teeth, bolted cheek 5 mm
- 1 cylinder (0.9m - 1.2m), 2 cylinders (1.4m - 2.5m)
- Without mount or Euro mount from 1.2m

Ref. No.	Working width [m]	Number of tines [pcs.]	Loading capacity [m³]	Weight [kg]
2780	0,9	4	0,32	**1 586**
2781	1,1	5	0,40	**1 622**
2782	1,2	6	0,43	**1 731**
2783	1,4	7	0,50	**2 132**
2784	1,5	7	0,54	**2 260**

Optional equipment	Ref. No.	Price €
Other type of mount	2000+OTM	**On request**
Pressure relief valve	2000+OTV	**128**

Bucket with grabs heavy



Standard equipment:

- Height: 940mm
- Depth: 1090mm
- Steel thickness: 6mm, sides: 8mm and 12mm
- 2-part grab (versions above 2.0m)
- 2 cylinders
- Blade: 110x16mm (400 HB)
- Opening height: 1540mm
- Forged high tines: 790mm
- Without mount or Euro

Ref. No.	Working width [m]	Number of tines [pcs.]	Loading capacity [m³]	Weight[kg]	Price €
2740	1,8	9	1,30	515	**4 556**
2741	2,0	10	1,44	541	**4 720**
2742	2,2	10	1,58	588	**5 066**
2743	2,4	11	1,73	632	**5 303**
2744	2,6	12	1,87	680	**5 540**

Optional equipment	Ref. No.	Price €
Other type of mount	2000+OTM	**On request**

Grab bucket with a clamp, standard



Version S

height: 1025mm, depth: 1110mm, steel thickness: 5mm, screwed side walls: 10mm, blade: 150x16mm (500 HB), opening height: 1300mm, tooth length: 920mm, steel S355 - thickness 18mm

Standard equipment:

- Height: 910mm, depth: 990 mm, body thickness: 5mm, sides:10mm, blade: 110x16mm (500hb), opening height 11180mm, tooth: length:820mm, made of steel, steel S355, 16mm thickness
- Screwed sides
- 2 hydraulic cylinders
- Euro mount

Ref. No.	Working width [m]	Number of tines [pcs.]	Loading capacity [m³]	Weight [kg]	Price €
2073A	1,5	5	0,66	365	2 516
2074A	1,6	5	0,70	380	2 609
2075A	1,8	6	0,79	395	2 815
2076A	2,0	6	0,88	420	2 960
2077A	2,2	7	0,97	450	3 180
2078A	2,4	7	1,06	480	3 416
2075SA	1,8	6	0,97	570	3 618
2076SA	2,0	6	1,08	590	3 690
2077SA	2,2	7	1,19	610	3 911
2077ASA	2,3	7	1,24	630	4 092
2078SA	2,4	7	1,30	650	4 276

Optional equipment	Ref. No.	Price €
Other type of mount	2000+OTM	On request
Pressure relief valve	2000+OTVA	179

Grab bucket RX with a clamp



Standard equipment:

- Height: 950mm, depth: 1000mm, steel thickness: 4mm, flanks: 10mm, blade: 15mm, opening height: 1650mm, tooth length: 820mm, tooth thickness 15mm
- Screwed sides
- 2 hydraulic cylinders
- Euro mount

Ref. No.	Working width [m]	Number of tines [pcs.]	Loading capacity [m³]	Weight [kg]	Price €
2075RX	1,8	7	0,81	530	3 150
2076RX	2,0	8	0,90	570	3 306
2077RX	2,2	9	1,00	595	3 410
2078RX	2,4	10	1,10	670	3 671

Optional equipment	Ref. No.	Price €
Other type of mount	2000+OTM	On request

Grab bucket with a clamp, mini



Standard equipment:

- Height: 780mm, depth: 800mm
- Steel thickness: 4mm, sides: 6mm
- Opening height: 1000mm
- High teeth 820mm, thickness: 12mm
- 2 cylinders
- Blade: 110x12mm (400 HB)
- Without mount

Ref. No.	Working width [m]	Number of tines [pcs.]	Loading capacity [m³]	Weight [kg]	Price €
2795	0,9	3	0,3	290	1 622
2796	1,1	4	0,44	330	1 786
2797	1,3	4	0,48	350	1 859
2798	1,5	4	0,56	390	1 932

Optional equipment	Ref. No.	Price €
Hydraulic divider	2000+HFF	347
Oil flow divider	2000+OTV	128
Other type of mount	2000+OTM	On request

Grab bucket with a clamp, heavy



Version M

height: 1410mm, depth: 1330mm, opening height: 1910mm, high teeth in S355 steel (thickness: 16mm), length: 1260mm

Standard equipment:

- Height: 1230mm, depth: 1230mm
- Height of opening: 1660mm, high teeth in S355 steel (thickness: 16mm), length: 1150mm
- 2 cylinders
- Steel thickness: 6mm, sides: 12mm, bolted cheeks: 10mm
- Bottom reinforced with flat iron 100x8
- Blade: 150x20mm (400 HB)
- Without mount or Euro mount

Ref. No.	Working width [m]	Number of tines [pcs.]	Loading capacity [m³]	Weight [kg]	Price €
2745	1,8	6	1,42	807	6 378
2746	2,0	6	1,58	855	6 742
2747	2,2	7	1,74	920	7 325
2748	2,4	7	1,90	954	7 836
2749	2,6	8	2,05	1001	8 127

Ref.No.	Working width [m]	Number of tines [pcs.]	Loading capacity [m³]	Weight [kg]	Price €
2746M	2,0	6	2,14	1041	7 726
2747M	2,2	6	2,35	1079	8 018
2748AM	2,4	7	2,57	1100	8 382
2749M	2,8	8	2,78	1116	8 710

Optional equipment	Ref. No.	Price €
Oil flow divider	2000+HFD	347
Other type of mount	2000+OTM	On request

Forks with grapple, standard



Standard equipment:

- Height: 880mm, depth: 1040mm
- 2 hydraulic cylinders
- Opening height: 1280mm
- Forged low tines: 810mm
- Forged high tines: 680mm
- Euro mount

Ref. No.	Working width [m]	Number of tines up [pcs.]	Number of tines bottom [pcs.]	Weight [kg]	Capacity [m³]	Price €
2041A	1,20	6	7	250	0,63	1 649
2042A	1,40	7	8	260	0,73	1 812
2043A	1,50	7	8	270	0,78	1 969
2044A	1,60	8	9	280	0,83	2 066
2045A	1,80	8	9	300	0,94	2 211
2046A	2,00	9	10	320	1,04	2 332
2047A	2,20	10	11	340	1,14	2 452
2048A	2,40	11	12	360	1,25	2 588

Optional equipment	Ref. No.	Price €
Other type of mount	2000+OTM	On request

Forks with grapple RX



Standard equipment:

- Height: 800mm -900 mm, depth: 900mm
- 2 hydraulic cylinders
- Opening height: 980mm-1030mm
- Forged low tines: 880 mm
- Forged high tines: 680 mm
- Euro mount

Ref. No.	Working width [m]	Number of tines up [pcs.]	Number of tines bottom [pcs]	Weight [kg]	Capacity [m³]	Price €
2041RX	1,20	5	6	174	0,50	1 510
2042RX	1,40	6	7	190	0,60	1 692
2043RX	1,50	6	7	236	0,75	1 875
2044RX	1,60	6	7	249	0,80	1 927
2045RX	1,80	7	8	266	0,90	2 083
2046RX	2,00	8	9	300	1,00	2 187
2047RX	2,20	9	10	315	1,10	2 291
2048RX	2,40	10	11	375	1,20	2 421

Optional equipment	Ref. No.	Price €
Other type of mount	2000+OTM	On request

Forks with grapple, mini

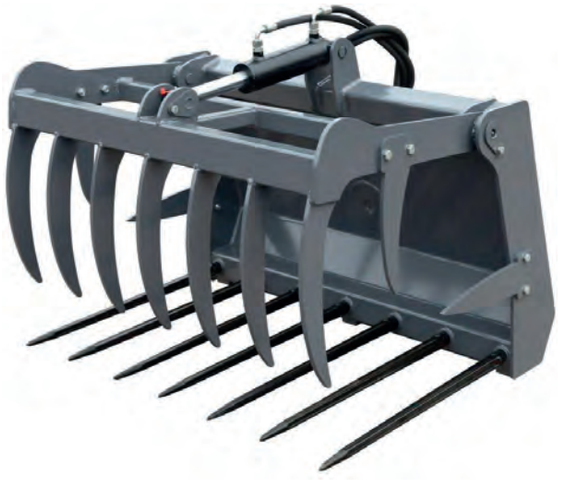

Standard equipment:

- Height: 800mm, depth: 880mm
- Opening height: 1030mm
- Forged lower tines: 818mm
- Forged high teeth: 400mm, thickness: 10mm
- 1 cylinder (0.9m - 1.2m), 2 cylinders (1.4m - 1.5m)
- 4 bolt-on tines
-
- Without mount or Euro mount from 1.1m

Ref. no.	Working width [m]	Number of tines [pcs]	Weight [kg]	Capacity [m³]	Price €
2775	0,9	4/5	155	0,36	**1 221**
2776	1,1	5/6	170	0,44	**1 294**
2777	1,2	6/7	195	0,48	**1 404**
2778	1,4	7/8	210	0,56	**1 783**
2779	1,5	7/8	220	0,60	**1 914**

Optional equipment	Ref. No.	Price €
Oil flow divider	2000+OTV	128
Other type of mount	2000+OTM	On request

Forks with grapple, heavy



Standard equipment:

- Height: 1020mm, depth: 1210mm
- Opening height: 1478mm
- Steel thickness: 6mm, sides: 12mm
- Openwork plate installed in the back to facilitate the operator's view
- Forged low tines: 860mm
- Forged high tines: 790mm
- 2 cylinders
- From 2,0m upper tine frame divided in the middle
- Without mount or Euro mount

Ref. No.	Working width [m]	Number of tines up [pcs.]	Number of tines bottom [pcs.]	Capacity [m³]	Weight [kg]	Price €
2725	1,8	8	9	1,62	470	**4 428**
2726	2,0	9	10	1,80	500	**4 683**
2727	2,2	10	11	1,98	530	**5 121**
2728	2,3	11	12	2,07	550	**5 230**
2729	2,5	12	13	2,25	580	**5 704**

Optional equipment	Ref. No.	Price €
Other type of mount	2000+OTM	On request

Manure forks

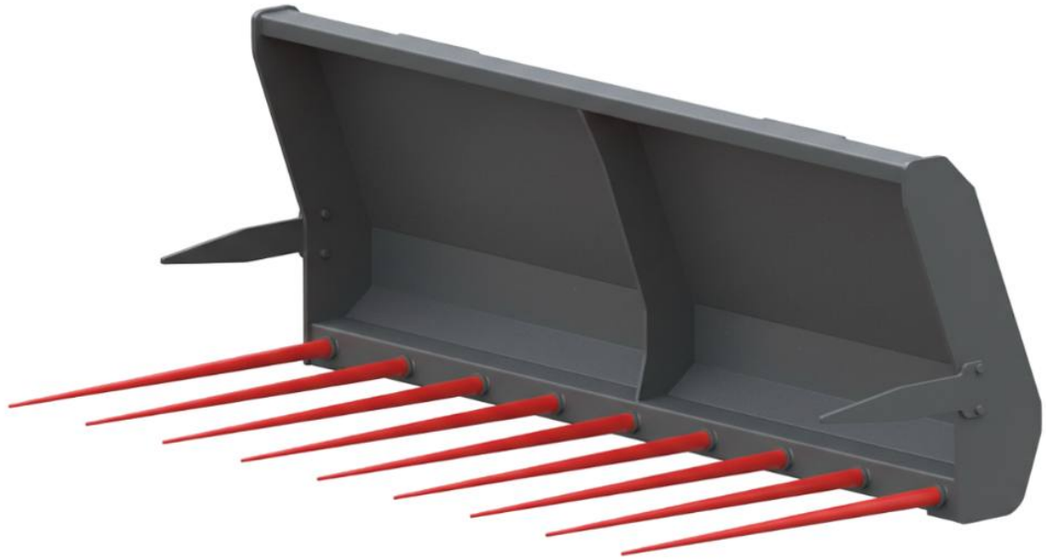

Standard equipment:

- • Height: 750 mm, depth: 880 mm
  • Length of forged tines: 810 mm
  • Coupling type: Euro

Ref. No.	Working width [m]	Number of tines [pcs.]	Weight [kg]	Price €
2033ATM	1,40	8	88	864
2033BTM	1,50	8	93	897
2034ATM	1,60	8	102	973
2035ATM	1,80	9	111	1 051
2036ATM	2,00	10	123	1 127
2037ATM	2,20	11	135	1 226
2037BTM	2,30	12	140	1 275
2038ATM	2,30	12	145	1 326

Optional equipment	Ref. No.	Price €
Other type of mount	2000+OTM	On request

zagroda

RX manure fork





Standard equipment:

- Euro mount
- Tine type Z
- Reinforcement: rib(s)

Ref. No.	Working width [m]	Number of tines [pcs.]	Number of ribs [pcs.]	Weight [	Price €
2032RX	1,20	6	1	90	729
2033RX	1,50	7	1	110	833
2035RX	1,80	8	2	130	938
2036RX	2,00	9	2	150	1042

Optional equipment	Code	Price €
Other type of mount	2000+OTM	On request

Potato bucket



Standard equipment:

- Height: 910mm
- Depth: 1140mm
- Thickness: steel bars: 20 mm
- Sides sheet thickness: 6mm
- Space between the bars: 40mm
- Blade 150 x 20mm (400HB)
- Euro mount

Ref. No.	Working width [m]	Capacity [m³]	Weight [kg]	Price €
2021	1,6	0,78	244	**2 205**
2022	1,8	0,88	271	**2 442**
2023	2,0	0,98	300	**2 661**
2024	2,2	1,08	327	**2 861**
2025	2,4	1,18	355	**3 080**

Optional equipment	Ref. No.	Price €
Other type of mount	2000+OTM	On request

Stone bucket



Standard equipment:

- Height: 706mm
- Depth: 1003mm
- Slides thicknes 15mm
- Bar thickness: 30mm
- Bar spacing 70mm
- Euro mount

Ref. No.	Working width [m]	Capacity [m³]	Weight [kg]	Price €
2026A	1,6	0,42	280	**1 969**
2027A	1,8	0,47	290	**2 090**
2028A	2,0	0,52	310	**2 247**
2029A	2,2	0,57	340	**2 685**
2030A	2,4	0,62	375	**2 887**

Optional equipment	Ref. No.	Price €
Andere Aufnahme	2000+OTM	On request

Adaptor





Standard equipment:

- Mini-loader mount to Euro mount or other type of front loader mount or 3-point linkage
  3-point linkage to Euro mount or other type of front loader mount
- Telescopic loader mount to Euro mount or other mount for front loader or 3-point linkage
- The dimensions shown in the table may differ slightly depending on the attachment chosen

Ref. No.	Adapter	Width [m]	Height [m]	Length [m]	Weight [kg]	Price €
2300	Adaptor from 3 point linkage to EURO or other linkage for front loader	~1,2	~0,83	~0,29	~75	727
2301	Adaptor from EURO or other linkage for front loader to 3 point linkage	~1,2	~0,49	~0,16	~120 - 190	738
2307	Adaptor from mini loader linkage to 3 point linkage, EURO mount or other linkage for front loader	~1,2	~0,49	~0,16	~100 - 130	On request
2310	Adaptor from telehandler to 3 point linkage, EURO Mount or other linkage for front loader	~1,2	~0,49	~0,16	~120 - 190	On request



Ref. No.	Adapter	Weight[kg]	Price €
2305	Triangle linkage, cat. II	35	613

Pallet forks, heavy

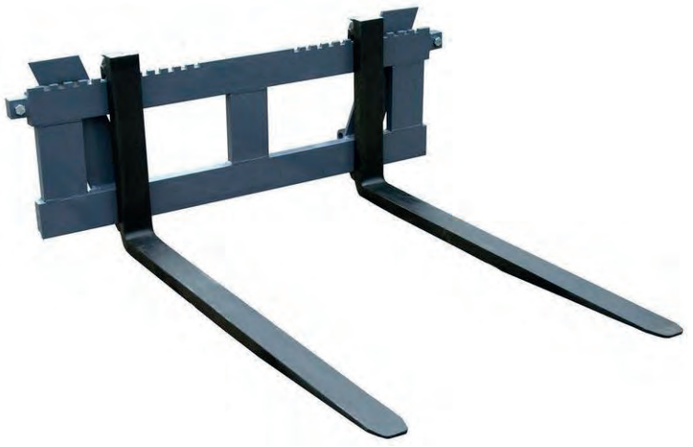

Standard equipment:

- Frame height: 410mm for 2,5 t and 510mm forks 3 and 4 ton forks
- Sheet thickness: frame 30mm
- 2 forged paws, with the displacement
- Euro mount

Ref. No.	Loading capacity [kg]	Arm profile [mm]	Weight [kg]	Price €
2757	3000	1600x40x120	200	1 710
2757B	3500	1600x45x100	250	1 819
2757C	5000	1600x50x125	300	2 570

Optional equipment	Ref. No.	Price €
Other type of mount	2000+OTM	On request

Pallet forks, standard



Ref. No. 2050TA - Pallet forks frame 1600kg with forged tines



Ref. No. 2051TM - Pallet forks frame 2000kg with forged tines

Standard equipment:

- Euro mount

1600 kg version

2 forged arms with mechanical shift

2000 kg version

2 forged arms with mechanical shift with stake sleeves

2500 kg version

2 forged arms with hydraulic shift

Version 4000 kg

2 forged arms with hydraulic shift

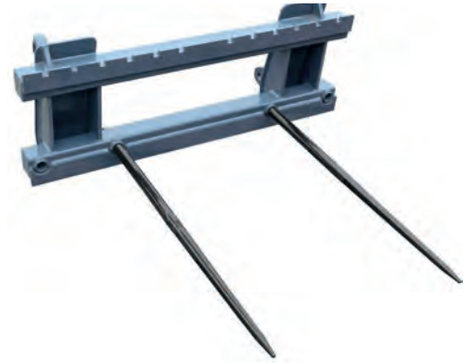

Spikes for pallet forks frame 2000kg



Ref. No. 2052 - Pallet forks frame 2500kg with hydraulically adjustable forks

Ref. No.	Loading capacity [kg]	Arm profile [mm]	Weight [kg]	Price €
2050TA	1600	1200x40x80	145	819
2051TM	2000	1200x40x80	160	927
2052	2500	1200x40x100	250	2 041
2054	4000	1400x45x125	270	2 661

Optional equipment	2050TA	Price €	2051TM	Price €	2052	Price €	2054	Price €
Other type of mount	2000+OTM	On request	2000+OTM	On request	2000+OTM	On request	2000+OTM	On request
Oil flow divider	x		x		2000+HFD	347	2000+HFD	347
Spikes length 1100 mm (set = 2 pcs)	x		2051+T	93	x		x	

Pallet forks RX



Standard equipment:

- 2 forged legs with mechanical shift
- Frame with sleeves for spikes
- Fork Screw Lock
- Euro mount

Ref. No.	Loading capacity [kg]	Arm profile [mm]	Weight [kg]	Price €
2050RX	1600	1200x35x80	130	625
2051RX	2000	1200x40x80	130	761
2052RX	2500	1200x40x100	150	865

Optional equipment	Ref. No.	Price €
Spikes length 1100 mm (2pcs)	2051RX+T	79
Other type of mount	2000+OTM	On request

Pallet turntable



Standard equipment:

- Folding side and center arms
- Leg length 1200mm
- Frame length 1200mm
- Euro mount

Ref. No.	Loading capacity (kg)	Weight [kg]	Price €
2069A	2000	250	2 522

Optional equipment	Ref. No.	Price €
Other type of mount	2000+OTM	On request

Bale forks, standard





Standard equipment:

- Frame width: 1120mm
- Max load: 800-1700kg
- Lower tine length: 1100mm
- Euro mount

Ref. No.	Number of tines [pcs.]	Height [m]	Width [m]	Length [m]	Weight [kg]	Loading capacity [kg]	Price €
1911A	2	0,58	1,12	1,08	70	800	**399**
1912	3+1	1,2	1,1	1,14	110	1700	**850**

Optional equipment	1911A	Price €	1912	Price €
BigBag hook instead of 2-tooth device	-		x	
Other type of mount	2000+OTM	On request	2000+OTM	**On request**

Big Bag bale forks



Standard equipment:

- Reinforced forks with conical sleeves for spike
- Device with 2 teeth
- Capacity 2500kg
- Euro mount

Ref.no.	Nmber of tines [pcs.]	Height [m]	Width [m]	Length [m]	Weight [kg]	Loading capacity [kg]	Price €
1913	3+2	1,32-1,69	1,1	1,2	131	2500	**1 003**
1914	5+2	1,33-1,57	1,1	1,42	150	2500	**1 167**

Optional equipment	1913	Price €	1914	Price €
BigBag hook instead of 2-tooth device	1913+BBH	53	1913+BBH	**53**
Other type of mount	2000+OTM	On request	2000+OTM	**On request**

BIG BAG carrier



Standard equipment:

- Euro mount

Ref. No.	Width (mm)	Loading capacity [kg]	Weight [kg]	Price €
1930	1300/1500/1700	1000	100	930

Optional equipment	Ref. No.	Price€
Other type of mount	2000+OTM	On request



Standard equipment:

- Euro mount

Ref. No.	Width Br./Lä./Hö. [mm]	Weight [kg]	Loading capacity [kg]	Price €
1930RX	1340/570/1330-1570	98	1000	729

Optional equipment	Ref. No.	Price€
Tines (2 pcs)	1930RX+T	53
Other type of mount	2000+OTM	On request

Multi purpose bale carrier



Standard equipment:

- Length: 1130mm, height: 950mm (version with 3-point linkage), 460mm (version with EURO mount)
- Tube Ø 90mm x 3mm, length: 1130mm
- Manual adjustment of tube spacing: 840mm - 1230mm
- Euro mount

Ref. No.	Bale size [m]	Loading capacity [kg]	Weight [kg]	Price €
1921	0,80-1,80	1000	130	540

Optional equipment	Ref. No.	Price€
Pallet forks (2 pcs)	1921+PF	256
Tines (2 pcs)	1921+T	234
Other type of mount	2000+OTM	On request

Bale carrier, hydraulic



Standard equipment:

- Length: 1550 mm, height: 700 mm, depth: 1310 mm
- Rotatable pipe arms, length: 1200 mm
- 2 forged tines, length: 1200 mm
- Hydraulic adjustment of pipe spacing: 380-1550 mm
- Suitable for transporting 1 bale on the pipes and 2 bales on the tines
- EURO mount

Code	Bale size [m]	Loading capacity [kg]	Weight [kg]	Price €
1923A	0,80-1,80	1000	195	**1 480**

Optional equipment	Code	Price €
Pressure-holding valve (hydraulic lock DHV)	2000+OTV2	**127**
Other type of mount	2000+OTM	**On request**

Bale unwider with 3 tines



Standard equipment:

- 3 tines 1200mm
- Length with tines 1350mm
- Width 1130mm, height 560mm
- Hydraulic drive
- EURO mount

Code	Loading capacity [kg]	Weight [kg]	Price €
2933A	1000	180	**2 851**

Bale unroller



Standard equipment:

- Feeding with silage bales
- Unwinding straw bales
- Working speed adjustment
- Euro mount

Ref. No.	Width [m]	Weight [kg]	Price €
2934A	1,50	450,00	5 282

Optional equipment	Ref. No.	Price €
Rotor for bedding	2934A+R	1 794
EURO mount and 3 point linkage	2000+KOMBI	167
Other type of mount	2000+OTM	On request

Bale cutter

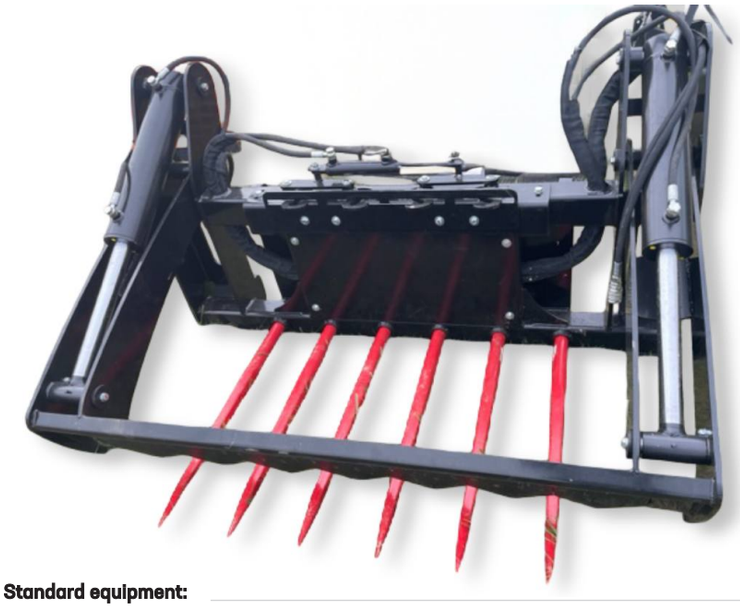

Standard equipment:

- Height: 975mm, depth: 1173mm
- Opening height: 1600mm
- Upper cutting teeth - welded
- Lower forged tines: 980mm
- 2 cylinders
- Special tines (hooks) catching foil and net during cutting process
- Euro mount

Ref. No.	Working width [m]	Number of tines up [pcs.]	Number of tines bottom pcs.]	Bale size [m]	Weight [kg]	Price €
2080A	1,76	7	6	<1,52	400	4 288

Optional equipment	Ref. No.	Price €
Oil flow divider	2000+HFDA	On request
Pressure relief valve VMP	2000+OTVA	179
Other type of mount	2000+OTM	On request

Straw gripper





Standard equipment:

- Standard version - EURO mount, trapezoidal frame
- Gripper opening - 1360mm
- One hydraulic cylinder
- Hardened teeth, length - 350 mm

Ref. No.	Number of tines [pcs.]	Working width [m]	Height [m]	Weight [kg]	Price €
1904S	8	1,5	1,1	154	1 526
1905S	12	1,5	1,6	176	1 755

Optional equipment	Ref. No.	Price €
Bracket to the straw gripper	1904S+A	347
Other type of mount	2000+OTM	On request

Round bale gripper with 1 cylinder, 2 movable arms

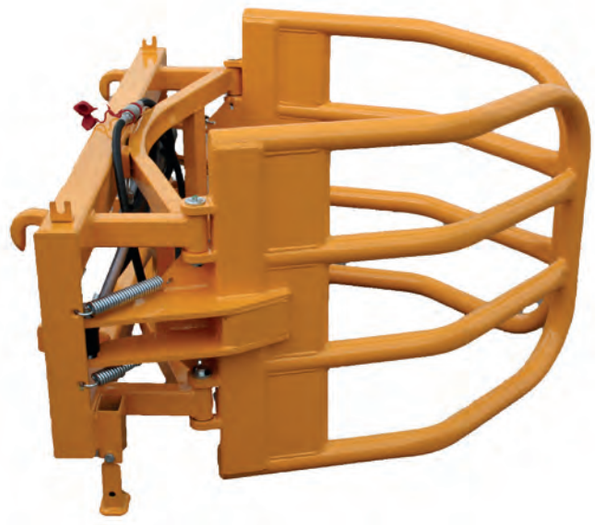

Standard equipment:

- Height: 750mm, depth: 1100mm
- One double-acting cylinder
- 2 moveable arms, tube Ø 60mm x 3mm
- Max. opening: 2130mm
- Euro mount

Ref. No.	Bale size [m]	Loading capacity [kg]	Weight [kg]	Price €
1903A	0,9-1,8	1000	190	1 362

Optional equipment	Ref. No	Price €
Other type of mount	2000+OTM	On request
Pressure holding valve DHV (Hydraulic lock)	2000+OTV2	127
Pressure relief valve	2000+OTVA	179

Round bale gripper RX with 1 cylinder, 2 movable arms



Standard equipment:

- 1 double-acting cylinder
- 2 movable arms
- Euro mount

Ref. No.	Max. opening width [mm]	Max. bale diam. [mm]	Dimensions (L/H/W) [mm]	Loading capacity [kg]	Weight [kg]	Price €
1903RX	1900	1700	1500/720/1300	800	155	**1 042**

Optional equipment	Ref. No.	Price €
Other type of mount	2000+OTM	**On request**

Round bale gripper ARX with 1 cylinder, 2 movable arms



Standard equipment:

- 1 double-acting cylinder
- 2 movable arms
- Euro mount

Ref. No.	Max. opening width [mm]	Max. bale diam. [mm]	Dimensions (L/H/W) [mm]	Loading capacity [kg]	Weight [kg]	Price €
1903ARX	1700	1500	1200/760/1300	800	155	**1 094**

Optional equipment	Ref. No.	Price €
Other type of mount	2000+OTM	**On request**

Round bale grabber with 2 cylinders and 2 movable arms



Standard equipment:

- Length: 1130 mm, Height: 750 mm, Depth: 950 mm
- 2 double-acting hydraulic cylinders
- 2 movable arms, pipe Ø 60 mm x 3.0 mm
- Max. arm opening: 2200 mm
- Support feet
- EURO mount

Code	Bale size [m]	Load capacity [kg]	Weight [kg]	Price €
1910A	0,9-2,2	1000	195	1 688

Optional equipment	Code	Price €
Pressure-holding valve (hydraulic lock DHV)	2000+OTV2	127
Other type of mount	2000+OTM	On request

Square bale grabber

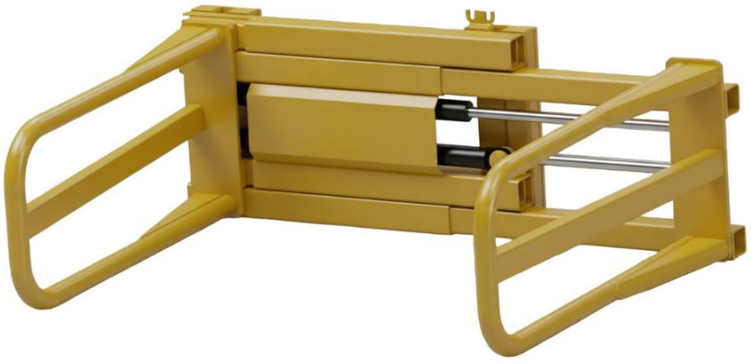

Standard equipment:

- Length: 1374 mm, Height: 565 mm, Depth: 1190 mm
- 2 double-acting hydraulic cylinders
- Max. arm opening: 2138 mm
- 2 movable arms, pipe Ø 60 mm x 3 mm
- EURO mount

Code	Bale size [m]	Load capacity [kg]	Weight [kg]	Price €
1902A	0,74-2,14	1000	220	2 159

Optional equipment	Code	Price €
Pressure-holding valve (hydraulic lock DHV)	2000+OTV2	127
Other type of mount	2000+OTM	On request

Slurry scraper



Standard equipment:

- Height: 600mm
- Reinforced rubber band: 380mm
- Euro mount

Ref. No.	Working width [m]	Weight [kg]	Price €
2110BTM	1,5	150	**1 057**
2111BTM	1,8	155	**1 139**
2112BTM	2,0	160	**1 226**
2113BTM	2,2	170	**1 308**
2113ATM	2,4	180	**1 392**
2116BTM	2,6	190	**1 435**
2115BTM	3,0	210	**1 646**

Optional equipment	Ref. No.	Price €
Other type of mount	2000+OTM	**On request**

Slurry scraper, hydraulic



Standard equipment

- • Height: 650 mm, depth:1000 mm
- Reinforced rubber strip: 500 x 30 mm
- Coupling type: Euro
- • Hydraulic angle adjustment
- • Euro mount

Ref. No.	Working width [m]	Weight[kg]	Price €
2112HTA	2,0	180	**1 747**
2113HTA	2,2	200	**1 852**
2116HTA	2,4	220	**1 954**
2114HTA	2,6	240	**2 055**

Optional equipment	Ref. No.	Price €
Other type of mount	2000+OTM	**On request**

Feeding bucket with auger

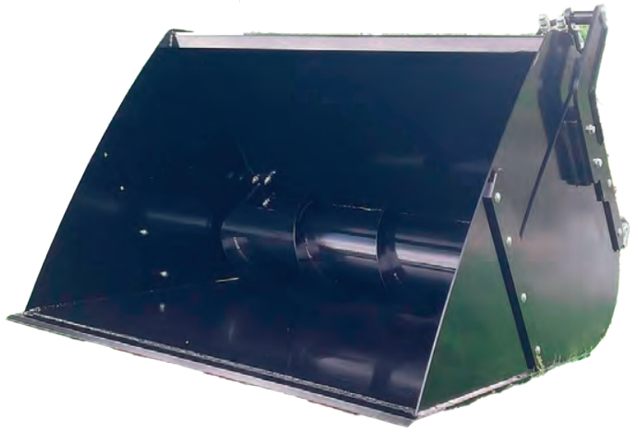



Rotor version

Standard equipment:

- Blade in abrasion-resistant steel
- Height 920/1000 mm, depth 1230 mm
- One auger
- Hydraulic motor
- One-sided or two-sided distribution (AD version)
- Hydraulic opening of the drain
- Euro mount

Version A

- **One-sided distribution**

Ref. No.	Working width [m]	Weight[kg]	Capacity [m³]	Price €
2910A	1,20	390	0,66	3 799
2911A	1,40	410	0,77	3 911
2912A	1,60	430	0,88	4 056
2913A	1,80	450	0,99	4 164
2914A	2,00	470	1,10	4 421
2915A	2,20	490	1,21	5 224
2916A	2,40	510	1,32	5 408

Optional equipment	Ref. No.	Price €
Hydraulic rotor	See page 141	
Gripper for bedding & feeding shovel	See page 141	
Other type of mount	2000+OTM	On request

Version AD
Two-sided distribution

Ref. No.	Working width [m]	Weight [kg]	Capacity [m³]	Price €
2910AD	1,20	410	0,66	4 092
2911AD	1,40	430	0,77	4 276
2912AD	1,60	460	0,88	4 421
2913AD	1,80	480	0,99	4 678
2914AD	2,00	500	1,10	4 895
2915AD	2,20	510	1,21	5 738
2916AD	2,40	530	1,32	5 919

Optional equipment	Ref. No.	Price €
Hydraulic rotor	See page 141	
Gripper for bedding & feeding shovel	See page 141	
Other type of mount	2000+OTM	On request

Bedding bucket with 2 rotors





Standard equipment:

- 2 rotors
- Discharge to the right, left, and/or front adjustable via sliding plates
- Rotors diameter 420mm
- Hydraulic motor
- EURO mount

Ref. No.	Working width [m]	Capacity [m3]	Weight [kg]	Price €
2835A	1,60	1,60	500	11 022
2836A	2,20	2,50	600	11 776

Optional equipment	Ref. No.	Price €
Other type of mount	2000+OTM	On request
Screw-on extensions	2810A+PD	725

Feed mixing shovel, suspended





Standard equipment:

- One or two rotors
- Height 1550/1250 mm, depth 1410 mm
- Hydraulic discharge opening
- EURO mount
-

Ref. No.	Working width [m]	Total width [m]	Capacity [m3]	Number of rotors [pcs]	Weight [kg]	Price €
2990A	1,50	1,52	1,50	1	520	9 965
2991A	2,20	2,36	2,50	2	750	11 625

Optional equipment	Ref. No.	Price €
Other type of mount	2000+OTM	On request
Hydraulic rotor	See page 129	

Feeding bucket MAXI with auger

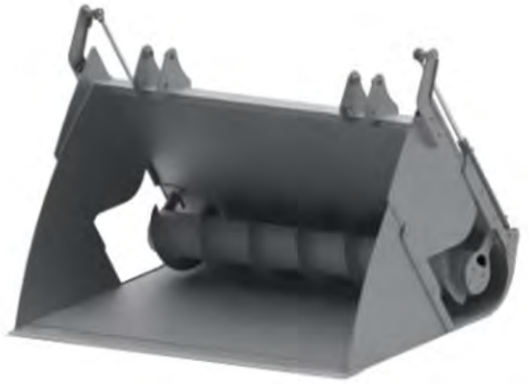

Standard equipment:

- Wear plate made of durable steel
- Height 1060 mm, depth 1500 mm
- Two hydraulic flaps - distribution on the right and left
- One auger
- Hydraulic drive
- EURO mount

Ref. No.	Working width [mm]	Weight [kg]	Capacity [m³]	Price €
2940A	1600	520	1,36	**5 079**
2941A	1800	570	1,53	**5 300**
2942A	2000	590	1,70	**6 396**
2943A	2200	620	1,87	**6 834**
2944A	2300	640	1,96	**6 979**
2945A	2400	660	2,04	**7 087**

Optional equipment	Ref. No.	Price €
Hydraulic rotor	See page 141	
Gripper for bedding & feeding shovel	See page 141	
Other type of mount	2000+OTM	**On request**

Feeding bucket with hydraulic cutter



Standard equipment:

- Hydraulic rotor
- Height 840/1050mm, depth 1200mm
- Heavy-duty steel wear blade
- Hydraulic drive
- Euro mount

Ref. No.	Working width [mm]	Weight [kg]	Capacity [m³]	Price €
2926A	1200	340	0,54	**4 252**
2927A	1400	360	0,63	**4 518**
2928A	1600	380	0,72	**4 783**
2929A	1800	400	0,81	**4 916**
2930A	2000	420	0,90	**5 182**
2931A	2200	440	0,99	**5 448**
2932A	2400	460	1,08	**5 713**

Optional equipment	Ref. No.	Price €
Other type of mount	2000+OTM	**On request**

Feeding bucket bucket with mixing function



Standard equipment:

- Preparation and disribution of feed
- Height 1125mm, depth 1325mm
- Two hydr. hatches - right and left-hand distribution
- Mixer equipped with star-shaped knives - facilitating feed shredding
- Hydraulic drive
- Hydraulic hatches opening
- Euro mount

Ref. No.	Working width [m]	Weight [kg]	Capaticy [m³]	Price €
2970A	1,2	500	1,0	7 939
2971A	1,5	600	1,2	8 503
2972A	1,8	650	1,5	9 765
2973A	2,0	700	1,7	11 360
2974A	2,2	750	1,9	12 954

Optional equipment	Ref. No.	Price €
Hydraulic rotor	See page 141	
Gripper for bedding & feeding shovel	See page 141	
Other type of mount	2000+OTM	On request

Feeding bucket with auger for potatoes and beets



Standard equipment:

- A hydraulic flap - distribution on one side, right or left
- One auger
- Height 913mm, depth 1145 mm
- Heavy-duty steel wear blade
- Hydraulic drive
- Euro mount

Ref. No.	Working width [m]	Weight [kg]	Capaticy [m³]	Price €
2975A	1,2	390	0,66	3 799
2976A	1,4	410	0,77	3 911
2977A	1,6	430	0,88	4 056
2978A	1,8	450	0,99	4 164
2979A	2,0	470	1,10	4 421
2980A	2,2	490	1,21	5 224
2981A	2,4	510	1,32	5 408

Optional equipment	Ref. No.	Price €
Hydraulic rotor	See page 141	
Gripper for bedding & feeding shovel	See page 141	
Other type of mount	2000+OTM	On request
Attachement for shredding beets and potatoes	2975A+CM	1 359

Feeding bucket with transmission belt (for loose feed) MINI





Standard equipment:

- Distribution of dry feed such as maize and short grass
- Conveyor
- Two hatches - left and right distribution
- Height 1200/1100mm, depth 1260mm
- Hydraulic drive
- Heavy-duty steel wear blade
- Euro mount

Ref. No.	Working width [m]	Capacity [m³]	Weight [kg]	Price €
2918A	1,22	1,1	300	4 484
2919A	1,52	1,3	350	4 817

Optional eqipment	Ref. No.	Price €
Hydraulic rotor	See page 141	
Gripper for bedding & feeding shovel	See page 141	
2 anti-blocking rollers	2920A+ABR	1 528
Hydraulic hatches opening	2920A+HO	1 063
Other type of mount	2000+OTM	On request

Feeding bucket with trasmission belt





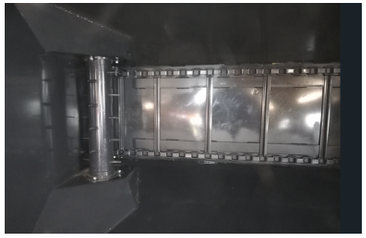

Standard equipment:

- Distribution of dry feed such as maize and short grass
- Conveyor
- Two hatches - left and right distribution
- Height 1550/1230mm, depth 1280mm
- Hydraulic drive
- Heavy-duty steel wear blade
- Euro mount

Ref. No.	Working width [m]	Weight [kg]	Capaticy [m³]	Price €
2920A	1,20	450	1,22	4 714
2921A	1,50	510	1,52	5 043
2922A	1,80	590	1,82	5 445
2923A	2,00	650	2,00	6 067

Optional equipment	Ref. No.	Price €
Hydraulic rotor	See page 141	
Gripper for bedding & feeding shovel	See page 141	
2 anti-blocking rollers	2920A+ABR	1 528
Hydraulic hatches opening	2920A+HO	1 063
Other type of mount	2000+OTM	On request

Bedding and feed distribution bucket MINI

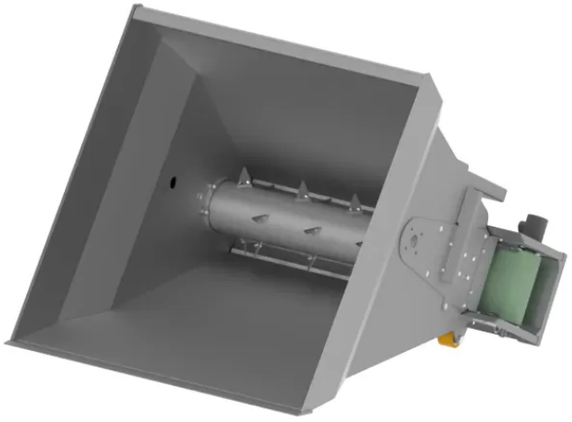

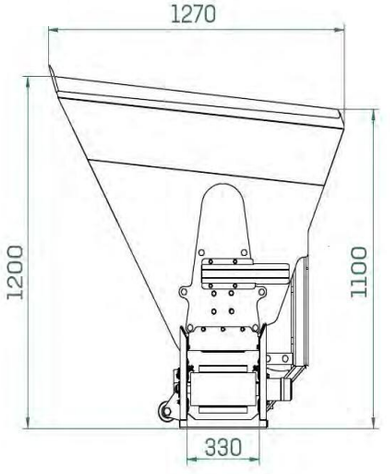

Standard equipment:

- One roller
- Conveyor belt
- Single-sided discharge, right or left
- Speed adjustment for roller and belt
- Hydraulic drive
- Euro mount

Ref. No.	Width [m]	Capacity [m³]	Weight[kg]	Price €
2807A	1,20	0,80	300	5 049
2808A	1,40	0,90	320	5 348
2809A	1,60	1,00	350	5 614

Optional equipment	Ref. No.	Price €
Anti-blocking bar	2807A-BR	91
Screw-on extensions	2810A+PD	725
Other type of mount	2000+OTM	On request

Bedding and feed distribution bucket



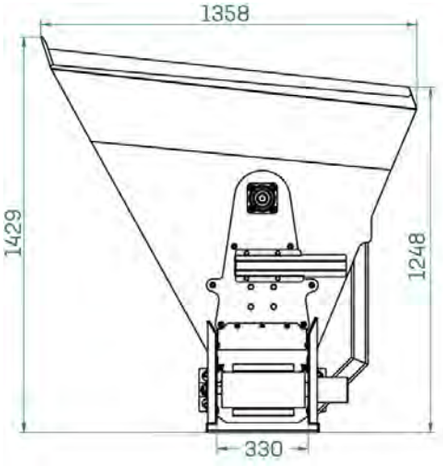

Standard equipment:

- One roller
- Conveyor belt
- Single-sided discharge, right or left
- Speed adjustment for roller and belt
- Anti-feed bar
- Hydraulic drive
- Euro mount

Ref. No.	Width [m]	Capacity [m³]	Weight [kg]	Price €
2803A	1,15	0,92	350	5 152
2804A	1,30	1,04	370	5 445
2805A	1,55	1,24	400	5 810
2806A	1,80	1,44	440	6 175

Optional equipment	Ref. No.	Price €
Screw-on extensions	2810A+PD	
Other type of mount	2000+OTM	On request

Bedding and feed distribution shovel with 1 roller



Standard equipment:

- One roller
- Hydraulic drive
- Speed adjustment for roller
- Material-blockage-preventing roller
- EURO mount

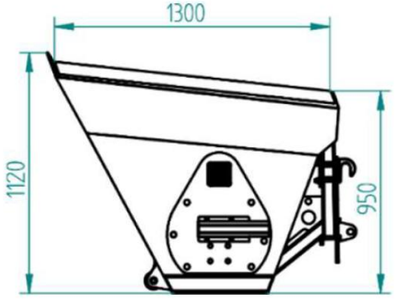

Code	Workingwidth [m]	Loadingcapacity[m³]	Weight[kg]	Price €
2815A	1,15	1,26	350	4 934
2816A	1,30	1,43	370	5 079
2817A	1,55	1,71	400	5 161
2818A	1,80	1,98	450	5 738
2819A	2,00	2,2	500	6 139

Optional equipment	Code	Price €
Screw-on extention	2810A+PD	725
Other type of mount	2000+OTM	On request

Bedding and feed distribution shovel with 2 rollers



Standard equipment

- Two rollers
- Hydraulic drive
- Speed adjustment for roller
- Material-blockage-preventing roller
- EURO mount

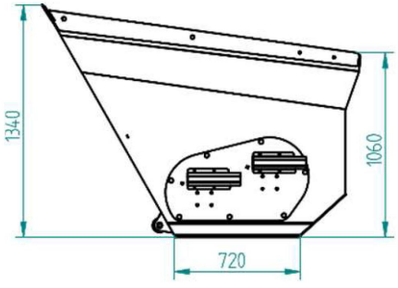

Code	Working width [m]	Loading capacity [m³]	Weight[kg]	Price €
2825A	1,15	1,54	400	5 810
2826A	1,30	1,75	420	6 175
2827A	1,50	2,10	450	6 541
2828A	1,80	2,45	510	6 906
2829A	2,00	2,73	550	7 637

Optional equipment	Code	Price €
Screw-on extention	2810A+PD	725
Other type of mount	2000+OTM	On request

Bedding and feed distribution bucket MAXI

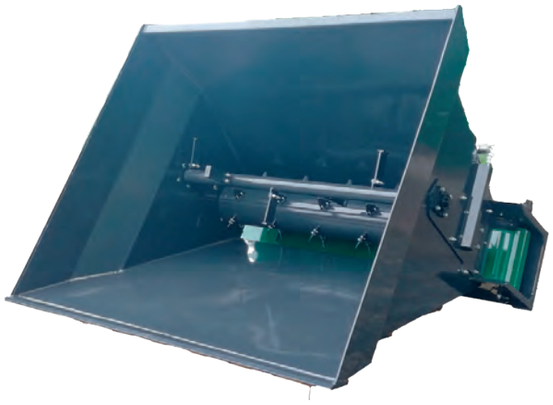



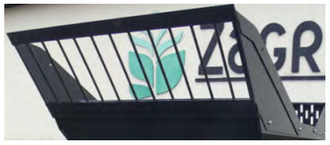

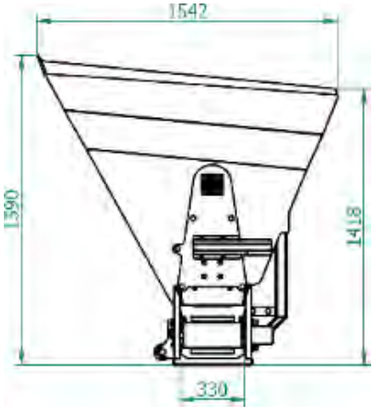

Standard equipment:

- Bedding with chopped straw, sawdust and other lightweight materials
- One roller
- Anti-blocking bar
- Roller and belt speed control
- Two hatches - left and right distribution
- Hydraulic drive
- Euro mount

Ref. No.	Width [m]	Height [m]	Weight [kg]	Capacity [m³]	Price €
2810A	1,15	1,61	400	1,26	5 701
2811A	1,30	1,61	420	1,43	5 810
2812A	1,55	1,61	450	1,71	5 991
2813A	1,80	1,61	510	1,98	6 541
2814A	2,00	1,61	550	2,20	6 906

Optional equipment	Ref. No.	Price €
Gripper for bedding & feeding shovel	See page 141	
Screw-on extention	2810A+PD	725
Other type of mount	2000+OTM	On request

Bedding and feed distribution bucket with two rollers







Standard equipment:

- Bedding with chopped straw, sawdust and other lightweight materials
- Two rollers
- Anti-blocking bar
- Roller and belt speed control
- Two hatches - left and right distribution
- Hydraulic drive
- Euro mount

Ref. No.	Working width [m]	Weight [kg]	Capaticy [m³]	Price €
2820A	1,15	450	1,54	6 906
2821A	1,30	490	1,75	7 271
2822A	1,55	540	2,10	7 637
2823A	1,80	590	2,45	8 002
2824A	2,00	650	2,73	8 733

Optional equipment	Ref. No.	Price €
Bypass valve	2820A+DV	876
Screw-on extention	2810A+PD	725
Other type of mount	2000+OTM	On request

Silo cutter



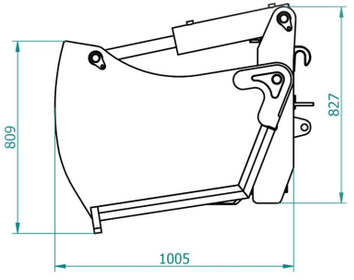

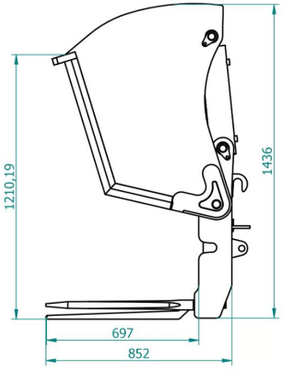

Standard equipment:

- Side wall thickness: 10 mm
- Casing thickness: 6 mm
- Scraper bar HB500/110x 16 mm
- Replaceable cutting blade
- Euro mount

Ref.No.	Working width [mm]	Weight [kg]	Volume [m3]	Price €
2857A	1600	590	0,80	5 445
2858A	1800	630	0,90	6 030

Optional equipment	Ref. No.	Price €
Other type of mount	2000+OTM	On request

Hydraulic rotor

Optional equipment for products from pages 132-139



	Ref. No.	Price €
Hydraulic rotor 1,2m	2910A+HC	2 957
Hydraulic rotor 1,3m	2918A+HC	On request
Hydraulic rotor 1,4m	2911A+HC	3 023
Hydraulic rotor 1,5m	2917A+HC	3 056
Hydraulic rotor 1,6m	2912A+HC	3 089
Hydraulic rotor 1,8m	2913A+HC	3 123
Hydraulic rotor 2,0m	2914A+HC	3 189
Hydraulic rotor 2,2m	2915A+HC	3 255
Hydraulic rotor 2,4m	2916A+HC	3 355

Grabs for bedding and feed distribution bucket

Optional equipment for products from pages 132-139



	Ref. No.	Price €
Gripper for bedding shovel 1,2m	2910A+HD	1 562
Gripper for bedding shovel 1,4m	2911A+HD	1 595
Gripper for bedding shovel 1,5m	2912A+HD	1 628
Gripper for bedding shovel 1,6m	2913A+HD	1 661
Gripper for bedding shovel 1,8m	2914A+HD	1 694
Gripper for bedding shovel 2,0m	2915A+HD	1 728
Gripper for bedding shovel 2,2m	2916A+HD	1 761
Gripper for bedding shovel 2,4m	2917A+HD	1 827

Silo cutter roller



Standard equipment:

- Euro-mount
- Screwed-in cutting knives
- One or two hydraulic motors

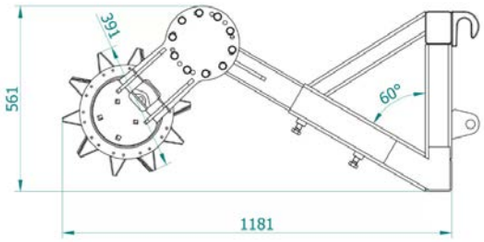

Ref.No.	Working width [m]	Weight [kg]	Price €
With 1 hydraulic motor			
2850A	1,20	160	2 159
2851A	1,40	180	2 259
2852A	1,60	190	2 359
2853A	1,80	200	2 425
2854A	2,00	210	2 492
With 2 hydraulic motors			
2855A	2,20	230	2 957
2856A	2,40	250	3 156

Optional equipment:	Ref.No.	Price €
Second hydraulic motor for models 2850A-2854A	2850A+HM	511
Other type of mount	2000+OTM	On request

Silage blade





Standard equipment:

- Bilateral blade
- 2 cylinders for the hydraulic version
- Euro mount

Ref. No.	Version	Working width [m]	Weight [kg]	Price €
2830A	Fix	2,50	450	5 587
2831A	Fix	3,00	490	6 190
2831AH	Hydraulic	3,00	490	7 700
2832A	Hydraulic	3,50	540	8 606
2833A	Hydraulic	4,00	590	9 814

Silage roller



Standard equipment:

- Roller diameter 900mm
- 3-point linkage



Ref. No.	Width [m]	Weight empty [kg]	Weight.max [kg]	Price €
2840	2,5	1500	2500	8 304
2841	3,0	1700	2700	9 633

Optional equipment	Ref. No.	Price €
Lateral hydraulic sideshift	2840+MDH	2 126
Lateral pressing arm	2840+R	3 289

Silage spreading roller



Standard equipment:

- Roller diameter 1140mm
- PTO shaft
- 2 cylinders
- 3-point linkage

Ref. No.	Width [m]	Weight [kg]	Price €
2842	2,00	730	10 418
2843	2,50	900	11 927



Tree transplanter









Standard equipment:

- Hardened steel shovels HB500, thickness: 8 mm
- Hydraulic drive, min 60 l/min 180 bar
- Each shovel controlled separately by hydraulic cylinders, pressure force per shovel - 5 T
- Heavy-duty 8 mm thick steel frame
- Frame opening and closing by hydraulic cylinders
- Sequentially controlled shovels, electro-hydraulic control (remote control included)
- Tree trunk retaining straps
- Euro mount

Ref. No.	Working depth [cm]	Max. tree diam. [cm]	Weight [kg]	Price €
2211	90	20	9600	17 461
2210	60	15	7000	15 431

Optional equipment	Ref. No.	Price €
Other type of mount	2000+OTM	On request

Wood bale grapple with 1 grape for forklift YANKEE-S, 1,0t



Ref. No. 2200AA

Standard equipment:

- Mounted on pallet fork frame

Wood grapple YANKEE 1,1t



Ref. No. 2200A

Standard equipment:

- Bottom fork spacing: 685mm
- Hydraulic valve
- Euro mount

Ref. No.	Model	Capacity [kg]	Weight [kg]	Height [mm]	Width [mm]	Max. opening [mm]	Min. log diameter [mm]	Max. log diameter [mm]	Preis €
2200AA	YANKEE-S	1000	66	1104	130	1285	1220	860	964
2200A	YANKEE	1000	160	940	685	975	120	675	1684

Optional equipment	Ref. No.	Price €
Other type of mount	2000+OTM	On request

Two arm bale grapple BRAVO-S 1,0t



Ref. No. 2200X

Wood gripper twin arm BRAVO 1,0t



Ref. No. 2200AX

Wood gripper twin arm ALFA 1,0t



Ref. No. 2205

Standard equipment:

- 1 hydraulic cylinder Ref. No. 2205
- 2 hydraulic cylinders recf 2200x and 2200AX
- Euro mount

Ref. No.	Model	Capacity [kg]	Weight [kg]	Height [mm]	Width [mm]	Max. opening [mm]	Min. log diameter [mm]	Max. log diameter [mm]	Priec €
2200X	BRAVO-S	1000	220	900	1140	930	165	620	**1 900**
2200AX	BRAVO	1000	220	900	1124	929	167	620	**1 900**
2205	ALFA	1000	150	760	850	745	235	500	**1 317**

Optional equipment	Ref. No.	Price €
Other type of mount	2000+OTM	On request

zagroda

Wood grapple two arms DELTA-S 1,2t



Standard equipment:

- 2 independent arms
- 2 hydraulic cylinders
- EURO mount

Optional equipment

- Other type of mount on request

Ref. No. 2200

Twin arm wood griper DELTA 1,5t



Standard equipment:

- 2 hydraulic cylinders
- Euro mount

Optional equipment

- Other type of mount on request

Ref. No.2199A

Ref. No.	Model	Weight [kg]	Height [mm]	Width [mm]	Max. opening [mm]	Min. log diameter [mm]	Max. log diameter [mm]	Price €
2200	DELTA-S	243	851	1315	826	130	600	2 442
2199A	DELTA	510	1474	1200	1120	440	100	3 422

Wood gripper twin arm SIERRA 3,0t



Standard equipment:

- 2 hydraulic cylinders
- VMP bypass valve
- Sheet metal arm ≠ 25mm
- Without mount or EURO mount

Optional equipment

- Other type of mount

Ref. No. 2198

Wood gripper twin arm SIERRA 3,5t



Standard equipment:

- 2 hydraulic cylinders
- BVMP bypass valve
- Reinforced forks
- Without mount or Euro mount

Optional equipment

- Other type of mount

Ref. No. 2199

Ref. No.	Model	Capacity [kg]	Weight [kg]	Height [mm]	Width [mm]	Max. opening [mm]	Min. log diameter [mm]	Max. log diameter mm]	Price €
2198	SIERRA 3	3000	543	1380	1294	1758	130	820	4 301
2199	SIERRA 3.5	3500	618	1387	1284	1788	130	830	4 720

Wood bale grapple GOLF 0,8t, mounted for digger with slewing device



Ref. No.. 2207

Ref. No.	Model	Capacity [kg]	Weight [kg]	Max. opening [mm]	Price €
2207	GOLF 0,8	800	65	930	1 163
2207X	GOLF 1,0	1000	190	929	3 156

Optional equipment	Ref. No..	Price €
Hydraulic rotor	2000+RR30	774

Wood bale grapple GOLF 1,0t, mounted with Euro mount



Ref. No. 2207X

Optional equipment	Ref. No..	Price €
Other type of mount	2000+OTM	on request

Wood bale grapple GOLF-S 1,0t, mounted for digger with slewing device

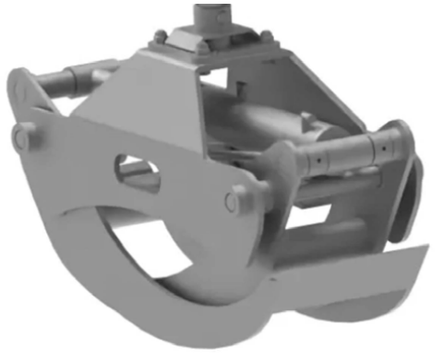

Ref. No. 2201

Ref. No.	Model	Capacity [kg]	Weight [kg]	Max. opening [mm]	Price €
2201	GOLF-S 1.0	1000	75	930	1 694
2201X	GOLF-S 1.5	1500	200	929	3 621

Optional equipment	Ref. No..	Price €
Hydraulic rotor	2000+RR10	664

Wood bale grapple GOLF-S 1,5t, mounted with EURO mount



Ref. No. 2001X

Optional equipment	Ref. No..	Price €
Other type of mount	2000+OTM	on request

zagroda

Wood grapple ZULU 0,8t on the boom



Standard equipment:

- 3-point linkage (no possibility to mount another mount)
- Rotation angle 60 degrees

Ref. No.	Model	Capacity [kg]	Weight [kg]	Working width [m]	Price €
2203	ZULU 0.8	800	350	Min. 0,3-max 1,9	2 656

Heavy wood gripper ZULU 1,2t



Standard equipment:

- 3-point linkage
- Rotation angle 60 degrees

Ref. No.	Model	Capacity [kg]	Weight [kg]	Working width [m]	Price €
2204	ZULU 1.2	1200	430	Min. 0,3-max 1,9	3 541

Disc chipper







Standard equipment:

- 3-point linkage cat. I-II
- 4 induction-hardened 60 HS steel blades
- Angle of discharge chute: 360
- Height of discharge chute: 152 cm
- Branch diameter: 10-120mm
- Cutting disc diameter 620mm
- PTO drive 540 rpm
- Hydraulic feed roller with 2 cylinders Ref. No. 2230H
- Euro mount

Ref. No.	Power demand [HP]	Length/Width/Height [m]	Weight[kg]	Capacity of hydr. distributor [L]	Hydraulic motor [L]	Price €
2230	18	0,71/0,73/1,63	188	-	-	1 984
2230H	18	0,9/1,0/1,63	230	40	160	3 077

Optional equipment	Ref. No.	Price €
PTO shaft 500 Nm, L 800	WOM500/800	110

Mounted transport box JDM Plus hydraulic





Standard equipment:

- EURO mount and 3-point Cat. II
- Double-acting tilt cylinder + auxiliary lift cylinder
- Folding front panel with a reversible system for automatically raising the front panel
- 1500 kg capacity
- Powder-coated

Ref.	Width [m]	Volume [m3]	Hydraulic system [MPa]	Payload [kg]	Weight [kg]	Price €
2483RS	1,80	1,10	18	1500	500	3 772
2484RS	2,00	1,25	18	1500	520	3 903
2485RS	2,20	1,35	18	1500	540	4 100
2485RS	2,40	1,45	18	1500	560	4 288



Mounted transport box, mechanical



Standard equipment:

- 3-point linkage cat. I and II
- Closing side - hinged
- Mechanically released tipping
- Slat for easy loading
- Hooks for securing goods
- Powder painted

Ref. No.	Width [m]	Length [m]	Height [m]	Capacity [kg]	Weight [kg]	Price €
2501S	1,20	1,00	0,70	250	137	880
2502S	1,50	1,00	0,70	350	158	984
2503S	1,80	1,00	0,70	450	183	1 047
2504S	2,00	1,00	0,70	550	208	1 120

Mounted transport box, galvanized



Standard equipment:

- 3-point linkage cat. I and II
- Closing side - hinged
- Slat for easy loading
- Mechanically released tipping
- Galvanized

Ref. No.	Width [m]	Length [m]	Heiath [m]	Capacity [kg]	Weight [kg]	Price €
2510	1,80	1,00	0,60	900	240	1 561

Ref. No.	Width [m]	Length [m]	Higth [m]	Volume [kg]	Weight [kg]	Price €
2510SL	1,80	1,00	0,60	500	120	906

Mounted transport box, hydraulic, smooth walls





Standard equipment:

- 3-point linkage cat. I and II
- Supporting frame connected with a 3-point linkage
- Closing side - hinged
- Hydraulic tipping - one cylinder
- Slat for easy loading
- Powder painted

Ref. No.	Width [m]	Length [m]	Height [m]	Capacity [kg]	Weight [kg]	Price €
2519RN	1,5	1,25	0,4	750	270	on request
2520RN	1,8	1,25	0,4	750	310	on request
2521RN	2,0	1,25	0,4	750	350	on request

Mounted transport box, hydraulic, profiled walls





Standard equipment:

- 3-point linkage cat. II
- Supporting frame connected with a 3-point linkage
- Closing side - hinged
- Hydraulic tipping - one cylinder
- Powder painted

Ref. No.	Width [m]	Length [m]	Height [m]	Capacity [kg]	Weight [kg]	Price €
2519RN	1,5	1,35	0,55	700	120	2 159
2520RN	1,8	1,35	0,55	700	140	2 210
2521RN	2,0	1,35	0,55	700	160	2 286

Screw conveyor with hydraulic drive



Standard equipment:

- Hydraulic drive
- The position of the discharge opening is regulated by a rope mechanism
- Capacity up to 25 t / h
- Pipe diameter 140mm
- Control from the cab - version without three-way valve
- Hopper with grid
- Galvanized

Ref. No.	Weight [kg]	Length [m]	Price €
3301	91	3,0	**2 544**
3305	102	4,0	**2 777**

Optional equipment		Ref. No.	Price €		Ref. No.	Price €
Stainless steel version	3,0 m	3301+IS	**1 111**	4,0 m	3305+IS	**1 177**
Flexible discharge tube		3301+EC	**193**		3301+EC	**193**

Screw conveyor with hydraulic drive



Standard equipment:

- Conveyor to be mounted directly to the rear side of the trailer (at the gate valve)
- Hydraulic drive
- Mechanically folded for transport
- The position of the discharge opening regulated by a rotary guide with a reel
- Capacity up to 25 t / h
- Pipe diameter 140mm
- Electric switch controll mounted on the discharge pipe (power supply from the electric trailer system)
- Flexible discharge
- Galvanised

Ref. No.	Weight [kg]	Length [m]	Price €
3300	102	4,0	**3 157**

Optional equipment	Ref. No.	Price €
Stainless steel version	3301+IS	**1 374**

Electric galvanized steamer





Standard equipment:

- Power demand: 50Hz, 230V
- Rated power: 2000W
- Galvanized steamer boiler
- Average steamer operation time when steaming a single potato charge: 6 h.
- Water heating to a temperature of approx. 95 ° C
- The maximum inclination of the boiler (from the vertical): 106 °

Ref. No.	Weight [kg]	Capacity [L]	Price €
3410	40	63	on request
3411	60	100	on request
3412	80	160	on request

Solid fuel galvanized steamer (coal)





Standard equipment:

- Solid fuel galvanized steamer (coal)
- Galvanized steamer boiler
- Sheet thickness >1,5 mm

Ref. No.	Weight [kg]	Capacity [L]	Price €
3401	60	60	417
3402	80	100	443
3403	100	160	547
3404	120	200	651

Trolley for hay transporting



Standard equipment:

- Forks made of spring steel fi 14mm
- Wheels 400×8
- Jaw opening height 95cm

Ref. No.	Working width [m]	Number of tines [pcs.]	Weight [kg]	Price €
3710	0,6	5	75	886
3711	0,8	7	88	930

Earth drill





Standard equipment:

- 3-point linkage cat. II with frame
- Transmission
- Drill 250mm

Ref. No.	Weight [kg]	Price €
2605DL	150	1 562

Ref. No.	Drill	Price €
DL100	Ø 100	339
DL120	Ø 120	339
DL150	Ø 150	339
DL200	Ø 200	339
DL250	Ø 250	339
DL300	Ø 300	365
DL320	Ø 320	365
DL400	Ø 400	365
DL450	Ø 450	365
DL500	Ø 500	365

Seeder



Standard equipment:

- Stainless steel INOX spreading mechanism
- Dosage adjustment via slide valve
- Control from the cab
- Compact 110-liter tank

Ref. No.	Workingwidth [m]	Volume[L]	Weight [kg]	Price €
3702AJ	1-12	110	44	1 328

Grain crusher





Standard equipment:

- Electric motor
- Belt or sprocket drive
- High body tightness
- Infinitely variable roller gap adjustment
- Magnet separator at machine infeed to protect against metal parts
- Grain dosage control
- Working gap from 0.1mm to 0.5mm
- Foot height 750 mm

Ref. No.	Number of rollers [pcs.]	Width of rollers [mm]	Diameter of rollers [mm]	Power demand [kW]	Weight [kg]	Price €
3502	3	160	290	4	270	7143
3505	2	150	240	4	196	5 816
3503	2	300	240	7,5	305	7 434
3509	3	300	290	7.5	485	10 495
3504	3	300	240	7.5	350	9 548

Riding arena leveller

Standard version



Pro Version



Standard equipment:

- 3-point linkage (swiveling on the PRO version)
- 2 rows of 8 mm rake tines
- Cage roller ø 300 mm
- 2 protective wheels on the sides
- Scraper bar
- Side bar (swiveling on the PRO version)

Ref. No.	Working width [m]	Transport width with 2 securing wheels [m]	Depth [m]	Weight [kg]	Number of tines in the first row	Number of tines in the second row [pcs.]	Price €
STANDARD VERSION							
3730	1,50	1,70	1,35	170	5	6	2 325
3731	2,00	2,20	1,35	210	7	8	2 492
3732	2,40	2,60	1,35	250	9	10	2 658
PRO VERSION							
3733	1,60	1,80	1,60	260	5	6	3 322
3734	2,00	2,20	1,60	290	7	8	3 488
3735	2,45	2,65	1,60	320	9	10	3 654



zagroda.eu

ul. Zakopiańska 9, 30-418 Kraków, Poland

zagroda

Contact

zagroda.eu

ul. Zakopiańska 9,
30-418 Kraków, Poland

Phone.: + 48 517 701 375

gabriela.gorska@zagroda.pl

European Funds
Smart Growth

Republic of Poland

Polska

European Union
European Regional Development Fund